LIGHT COMMERCIAL - RESIDENTIAL DC
VEHICULAR SWING GATE OPERATOR

INSTALLATION MANUAL

Model LA500

LA5001PKGDC
Single Arm Package

LA500DC
Primary 24 VDC Actuator Arm for single swing gate applications

LA500DCS
Secondary 24 VDC Actuator Arm for dual swing gate applications

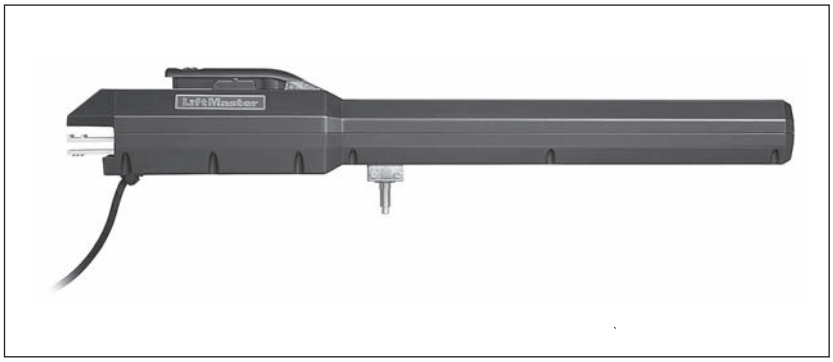

- THIS PRODUCT IS TO BE INSTALLED AND SERVICED BY A TRAINED GATE SYSTEMS TECHNICIAN ONLY.
- This model is for use on vehicular passage gates ONLY and not intended for use on pedestrian passage gates.
- This model is intended for use in Class I, II, III and IV vehicular swing gate applications.
- Visit www.liftmaster.com to locate a professional installing dealer in your area.
- This gate operator is compatible with MyQ® and Security+ 2.0™ accessories.

c UL us LISTED

For more information visit:
www.devancocanada.com
or call toll free: 855-931-3334

LiftMaster®

TABLE OF CONTENTS

SAFETY **1**
SAFETY SYMBOL AND SIGNAL WORD REVIEW 1
USAGE CLASS 2
UL325 ENTRAPMENT PROTECTION REQUIREMENTS 2
SAFETY INSTALLATION INFORMATION 3
GATE CONSTRUCTION INFORMATION 4

INTRODUCTION **5**
CARTON INVENTORY 5
SPECIFICATIONS 6
SITE PREPARATION 7
CHECK YOUR GATE 7
OVERVIEW OF TYPICAL INSTALLATION 8

INSTALLATION **9**
IMPORTANT SAFETY INFORMATION 9
INSTALLATION TIPS 9
POSITION THE BRACKETS 10
ATTACH THE BRACKETS 11
INSTALL THE CONTROL BOX 12
EARTH GROUND ROD 14
WIRE THE OPERATOR ARM TO THE CONTROL BOARD 14
DUAL GATES ONLY 15
INSTALL ENTRAPMENT PROTECTION 18
POWER WIRING 20
FINISH INSTALL 22

ADJUSTMENT **22**
LIMIT AND FORCE ADJUSTMENT 22
OBSTRUCTION TEST 24

PROGRAMMING **25**
REMOTE CONTROLS (NOT PROVIDED) 25
LIFTMASTER INTERNET GATEWAY (NOT PROVIDED) 26
ERASE ALL CODES 26
ERASE LIMITS 26
TO REMOVE AND ERASE MONITORED ENTRAPMENT PROTECTION DEVICES 26

OPERATION **27**
GATE OPERATOR SETUP EXAMPLES 27
CONTROL BOARD OVERVIEW 28
MANUAL RELEASE 29
RESET BUTTON 29
PARTY MODE 29
OPERATOR ALARM 30
REMOTE CONTROL 30

ACCESSORY WIRING **31**
EXTERNAL CONTROL DEVICES 31
VEHICLE DETECTION DEVICES 31
LOCKS 32
MISCELLANEOUS WIRING 32

EXPANSION BOARD **33**
EXPANSION BOARD OVERVIEW 33
AUXILIARY RELAYS 34
WIRING ACCESSORIES TO THE EXPANSION BOARD 35

MAINTENANCE **36**
IMPORTANT SAFETY INFORMATION 36
MAINTENANCE CHART 36
BATTERIES 36

TROUBLESHOOTING **37**
ERROR CODES 37
CONTROL BOARD LEDS 40
TROUBLESHOOTING CHART 41

APPENDIX **44**
INSTALLATION TYPES 44
POSITION THE BRACKETS 44
SOLAR PANEL(S) 45
LIMIT SETUP WITH A REMOTE CONTROL 50
SAMS WIRING WITH RELAYS NOT ENERGIZED 51

REPAIR PARTS **52**
LARGE METAL CONTROL BOX (XLM) 52
STANDARD CONTROL BOX 52
GATE OPERATOR ARM 52

WIRING DIAGRAM **53**
STANDARD CONTROL BOX 53
LARGE METAL CONTROL BOX 54

ACCESSORIES **55**

WARRANTY **57**

SAFETY

SAFETY SYMBOL AND SIGNAL WORD REVIEW

When you see these Safety Symbols and Signal Words on the following pages, they will alert you to the possibility of ***Serious Injury or Death*** if you do not comply with the warnings that accompany them. The hazard may come from something mechanical or from electric shock. Read the warnings carefully.

When you see this Signal Word on the following pages, it will alert you to the possibility of damage to your gate and/or the gate operator if you do not comply with the cautionary statements that accompany it. Read them carefully.

IMPORTANT NOTE:

- *BEFORE attempting to install, operate or maintain the operator, you must read and fully understand this manual and follow all safety instructions.*
- *DO NOT attempt repair or service of your gate operator unless you are an Authorized Service Technician.*

⚠ WARNING

MECHANICAL

⚠ WARNING

ELECTRICAL

CAUTION

SAFETY

USAGE CLASS

CLASS I – RESIDENTIAL VEHICULAR GATE OPERATOR

A vehicular gate operator (or system) intended for use in garages or parking areas associated with a residence of one-to four single families.

CLASS II – COMMERCIAL/GENERAL ACCESS VEHICULAR GATE OPERATOR

A vehicular gate operator (or system) intended for use in a commercial location or building such as a multi-family housing unit (five or more single family units), hotel, garages, retail store, or other buildings accessible by or servicing the general public.

CLASS III – INDUSTRIAL/LIMITED ACCESS VEHICULAR GATE OPERATOR

A vehicular gate operator (or system) intended for use in an industrial location or building such as a factory or loading dock area or other locations not accessible by or intended to service the general public.

CLASS IV– RESTRICTED ACCESS VEHICULAR GATE OPERATOR

A vehicular gate operator (or system) intended for use in a guarded industrial location or building such as an airport security area or other restricted access locations not servicing the general public, in which unauthorized access is prevented via supervision by security personnel.

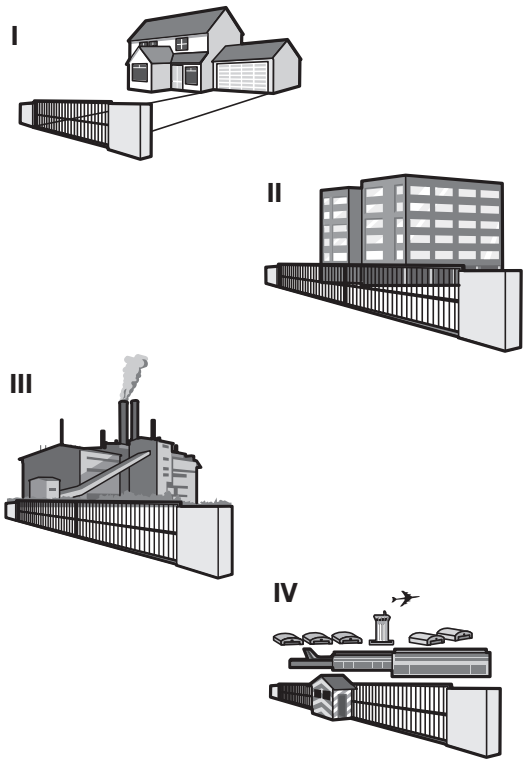

UL325 ENTRAPMENT PROTECTION REQUIREMENTS

This vehicular gate operator must be installed with at least two independent entrapment protection means as specified in the table below.

HORIZONTAL SLIDE AND SWING GATE OPERATOR	
GATE OPERATOR ENTRAPMENT PROTECTION TYPES	
Type A	Inherent (built into the operator) entrapment protection system
Type B1	Non-contact sensors such as photoelectric sensors
Type B2	Contact sensors such as edge sensors

The same type of device shall not be used for both entrapment protection means. Use of a single device to cover both the opening and closing directions is in accordance with the requirement; however, a single device is not required to cover both directions. This operator is provided with Type A. The installer is required to install additional entrapment protection devices in each entrapment zone.

IMPORTANT SAFETY INFORMATION

⚠ WARNING

To reduce the risk of INJURY or DEATH:

- READ AND FOLLOW ALL INSTRUCTIONS.
- NEVER let children operate or play with gate controls. Keep the remote control away from children.
- ALWAYS keep people and objects away from the gate. NO ONE SHOULD CROSS THE PATH OF THE MOVING GATE.
- Test the gate operator monthly. The gate MUST reverse on contact with a rigid object or reverse when an object activates the non-contact sensors. After adjusting the force or the limit of travel, retest the gate operator. Failure to adjust and retest the gate operator properly can increase the risk of INJURY or DEATH.
- Use the emergency release ONLY when the gate is not moving.
- KEEP GATES PROPERLY MAINTAINED. Read the owner's manual. Have a qualified service person make repairs to gate hardware.
- The entrance is for vehicles ONLY. Pedestrians MUST use separate entrance.
- SAVE THESE INSTRUCTIONS.

SAFETY INSTALLATION INFORMATION

1. Vehicular gate systems provide convenience and security. Gate systems are comprised of many component parts. The gate operator is only one component. Each gate system is specifically designed for an individual application.
2. Gate operating system designers, installers and users must take into account the possible hazards associated with each individual application. Improperly designed, installed or maintained systems can create risks for the user as well as the bystander. Gate systems design and installation must reduce public exposure to potential hazards.
3. A gate operator can create high levels of force in its function as a component part of a gate system. Therefore, safety features must be incorporated into every design. Specific safety features include:

   - Edges Sensors (contact)
   - Photoelectric Sensors
   - Vertical Posts
   - Guards for Exposed Rollers
   - Screen Mesh
   - Instructional and Precautionary Signage

4. Install the gate operator only when:

   a. The operator is appropriate for the construction and the usage class of the gate.

   b. All openings of a horizontal slide gate are guarded or screened from the bottom of the gate to a minimum of 6 feet (1.8 m) above the ground to prevent a 2-1/4 inches (6 cm) diameter sphere from passing through the openings anywhere in the gate, and in that portion of the adjacent fence that the gate covers in the open position.

   c. All exposed pinch points are eliminated or guarded, and guarding is supplied for exposed rollers.

5. The operator is intended for installation only on gates used for vehicles. Pedestrians must be supplied with a separate access opening. The pedestrian access opening shall be designed to promote pedestrian usage. Locate the gate such that persons will not come in contact with the vehicular gate during the entire path of travel of the vehicular gate.
6. The gate must be installed in a location so that enough clearance is supplied between the gate and adjacent structures when opening and closing to reduce the risk of entrapment. Swinging gates shall not open into public access areas.
7. The gate must be properly installed and work freely in both directions prior to the installation of the gate operator.
8. Controls intended for user activation must be located at least 6 feet (1.8 m) away from any moving part of the gate and where the user is prevented from reaching over, under, around or through the gate to operate the controls. Outdoor or easily accessible controls shall have a security feature to prevent unauthorized use.
   Exception: Emergency access controls only accessible by authorized personnel (e.g. fire, police) may be placed at any location in the line-of-sight of the gate.
9. The Stop and/or Reset (if provided separately) must be located in the line-of-sight of the gate. Activation of the reset control shall not cause the operator to start.
10. A minimum of two (2) WARNING SIGNS shall be installed, one on each side of the gate where easily visible.
11. For a gate operator utilizing a non-contact sensor:

    a. Reference owner's manual regarding placement of non-contact sensor for each type of application. See *Install Entrapment Protection* section.

    b. Care shall be exercised to reduce the risk of nuisance tripping, such as when a vehicle trips the sensor while the gate is still moving.

    c. One or more non-contact sensors shall be located where the risk of entrapment or obstruction exists, such as the perimeter reachable by a moving gate or barrier.

12. For a gate operator utilizing a contact sensor such as an edge sensor:

    a. One or more contact sensors shall be located where the risk of entrapment or obstruction exists, such as at the leading edge, trailing edge and post mounted both inside and outside of a vehicular horizontal slide gate.

    b. A hard wired contact sensor shall be located and its wiring arranged so the communication between the sensor and the gate operator is not subject to mechanical damage.

    c. A wireless device such as one that transmits radio frequency (RF) signals to the gate operator for entrapment protection functions shall be located where the transmission of the signals are not obstructed or impeded by building structures, natural landscaping or similar obstruction. A wireless device shall function under the intended end-use conditions.

    d. One or more contact sensors shall be located on the inside and outside leading edge of a swing gate. Additionally, if the bottom edge of a swing gate is greater than 6 inches (152 mm) above the ground at any point in its arc of travel, one or more contact sensors shall be located on the bottom edge.

    e. One or more contact sensors shall be located at the bottom edge of a vertical barrier (arm).

GATE CONSTRUCTION INFORMATION

Vehicular gates should be installed in accordance with ASTM F2200: Standard Specification for Automated Vehicular Gate Construction. For a copy, contact ASTM directly at 610-832-9585 or www.astm.org.

1. GENERAL REQUIREMENTS

1.1 Gates shall be constructed in accordance with the provisions given for the appropriate gate type listed, refer to ASTM F2200 for additional gate types.

1.2 Gates shall be designed, constructed and installed to not fall over more than 45 degrees from the vertical plane, when a gate is detached from the supporting hardware.

1.3 Gates shall have smooth bottom edges, with vertical bottom edged protrusions not exceeding 0.50 inches (12.7 mm) when other than the exceptions listed in ASTM F2200.

1.4 The minimum height for barbed tape shall not be less than 8 feet (2.44 m) above grade and for barbed wire shall not be less than 6 feet (1.83 m) above grade.

1.5 An existing gate latch shall be disabled when a manually operated gate is retrofitted with a powered gate operator.

1.6 A gate latch shall not be installed on an automatically operated gate.

1.7 Protrusions shall not be permitted on any gate, refer to ASTM F2200 for Exceptions.

1.8 Gates shall be designed, constructed and installed such that their movement shall not be initiated by gravity when an automatic operator is disconnected, in accordance with the following.

1.8.1 Vehicular horizontal slide gate. Shall not result in continuous, unimpeded movement in either lineal direction of its travel.

1.8.2 Vehicular horizontal swing gate. Shall not result in continuous, unimpeded movement in either direction along the arc of its path of travel.

1.9 For pedestrian access in the vicinity of an automated vehicular gate, a separate pedestrian gate shall be provided. The pedestrian gate shall be installed in a location such that a pedestrian shall not come in contact with a moving vehicular access gate. A pedestrian gate shall not be incorporated into an automated vehicular gate panel.

2. SPECIFIC APPLICATIONS

2.1 Any non-automated gate that is to be automated shall be upgraded to conform to the provisions of this specification.

2.2 This specification shall not apply to gates generally used for pedestrian access and to vehicular gates not to be automated.

2.3 Any existing automated gate, when the operator requires replacement, shall be upgraded to conform to the provisions of this specification in effect at that time.

3. VEHICULAR HORIZONTAL SLIDE GATES

3.1 The following provisions shall apply to Class I, Class II and Class III vehicular horizontal slide gates:

3.1.1 All weight bearing exposed rollers 8 feet (2.44 m), or less, above grade shall be guarded or covered.

3.1.2 All openings shall be designed, guarded, or screened from the bottom of the gate to the top of the gate or a minimum of 72 in. (1.83 m) above grade, whichever is less, to prevent a 2 1⁄4 in. (57 mm) diameter sphere from passing through the openings anywhere in the gate, and in that portion of the adjacent fence that the gate covers in the open position. The gate panel shall include the entire section of the moving gate,including any back frame or counterbalance portion of the gate.

3.1.3 A gap, measured in the horizontal plane parallel to the roadway, between a fixed stationary object nearest the roadway, (such as a gate support post) and the gate frame when the gate is in either the fully open position or the fully closed position, shall not exceed 2 1/4 inches (57 mm), refer to ASTM F2200 for Exception.

3.1.4 Positive stops shall be required to limit travel to the designed fully open and fully closed positions. These stops shall be installed at either the top of the gate, or at the bottom of the gate where such stops shall horizontally or vertically project no more than is required to perform their intended function.

3.1.5 All gates shall be designed with sufficient lateral stability to assure that the gate will enter a receiver guide, refer to ASTM F2200 for panel types.

3.2 The following provisions shall apply to Class IV vehicular horizontal slide gates:

3.2.1 All weight bearing exposed rollers 8 feet (2.44 m), or less, above grade shall be guarded or covered.

3.2.2 Positive stops shall be required to limit travel to the designed fully open and fully closed positions. These stops shall be installed at either the top of the gate, or at the bottom of the gate where such stops shall horizontally or vertically project no more than is required to perform their intended function.

4. VEHICULAR HORIZONTAL SWING GATES

4.1 The following provisions shall apply to Class 1, Class II and Class III vehicular horizontal swing gates:

4.1.1 Gates shall be designed, constructed and installed so as not to create an entrapment area between the gate and the supporting structure or other fixed object when the gate moves toward the fully open position, subject to the provisions in 4.1.1.1 and 4.1.1.2.

4.1.1.1 The width of an object (such as a wall, pillar or column) covered by a swing gate when in the open position shall not exceed 4 inches (102 mm), measured from the center line of the pivot point of the gate, refer to ASTM F2200 for exception.

4.1.1.2 Except for the zone specified in Section 4.1.1.1, the distance between a fixed object such as a wall, pillar or column, and a swing gate when in the open position shall not be less than 16 inches (406 mm), refer to ASTM F2200 for exception.

4.2 Class IV vehicular horizontal swing gates shall be designed, constructed and installed in accordance with security related parameters specific to the application in question.

INTRODUCTION

CARTON INVENTORY

NOT SHOWN: Documentation packet and hardware bag

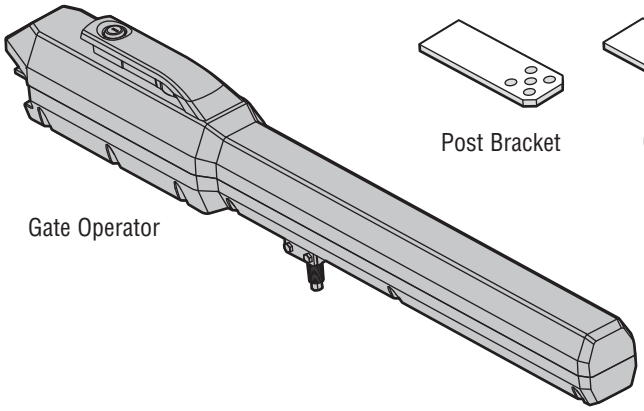
Gate Operator

Post Bracket

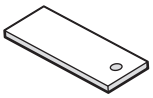
Gate Bracket

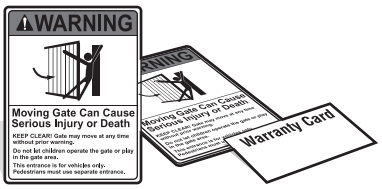

Warning Signs (2) and Warranty Card

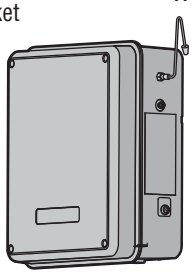
Standard Control Box with Batteries 12 Vdc 7AH (2)

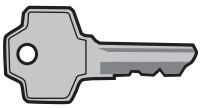
Key (2)

MODEL LA500DCS ONLY

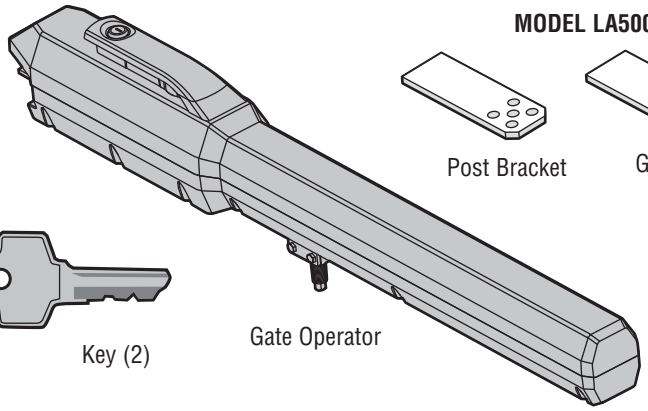
Gate Operator

Post Bracket

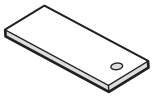
Gate Bracket

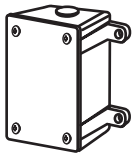
Junction Box

Terminal Block Connector

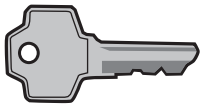
Key (2)

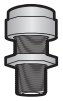
Watertight Connector (2)

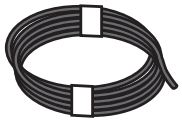
Extension Cable

Connector

OPTIONAL ACCESSORIES (ORDERED SEPARATELY)

Large Metal Control Box (Model LA500CONTXLMDC)

Ideal for installations that require additional room in the control box (batteries not included). For 240 Vac applications an additional toroidal transformer kit is required (refer to accessories).

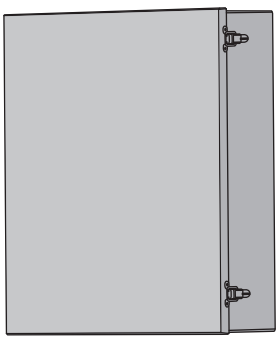

Large Metal Control Box for Solar Applications (Model XLSOLARCONTDC)

Required for solar installations (batteries not included). Requires two 33AH batteries, battery tray, and solar battery harness (refer to accessories).

INTRODUCTION

SPECIFICATIONS

This model is intended for use in vehicular swing gate applications:

Usage Classification	Class I, II, III, & IV
Main AC Supply	120 Vac, 2 Amps (8 Amps including Accessory Outlets) **OR** 240 Vac, 1 Amp
System Operating Voltage	24 Vdc Transformer Run / Battery Backup
Accessory Power	24 Vdc, 500mA max. for ON + SW (switched)
Solar Power Max	24 Vdc at 60 watts max.
Maximum Gate Weight/Length	1600 lbs. (725.7kg) / 8 ft (2.4 m) 800 lbs. (362.9 kg) / 16 ft (4.9 m) 600 lbs. (272.2 kg) / 18 ft (5.5 m)
90 Degree Travel Time*	15-18 seconds
Maximum Travel Range*	115 degrees
Maximum Daily Cycle Rate	300 cycles / day
Maximum Duty Cycle	Continuous
Operating Temperature	-40°C to 60°C (-40°F to 140°F)
Expansion Board	Provided
Inherent Entrapment Protection (Type A)	Dual - RPM and Current Sense
External Entrapment Protection (Type B1 and/or Type B2)	3 inputs per board - any combination of up to 3 photoelectric sensors and up to 2 edge sensors

**Travel time and range are affected by A and B mounting dimensions*

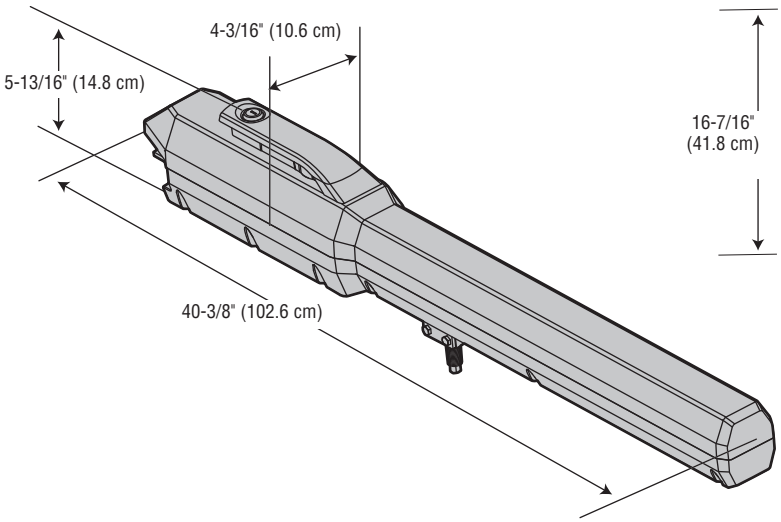

Standard Control Box

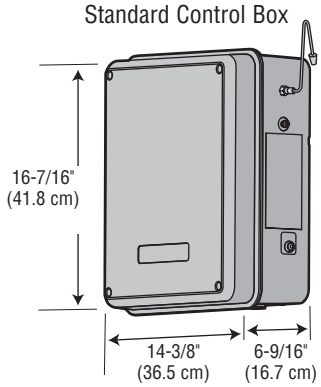

Large Metal Control Box

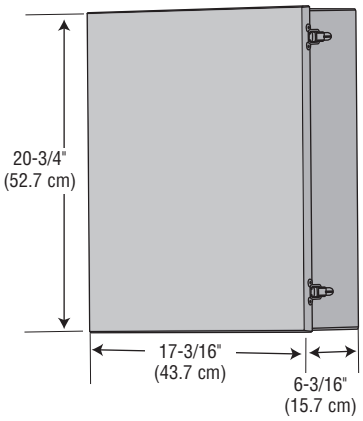

SITE PREPARATION

Check the national and local building codes **BEFORE** installation.

TRENCH

Trench and install conduit. Before trenching, contact underground utility locating companies. Conduit must be UL approved for low and high voltage.

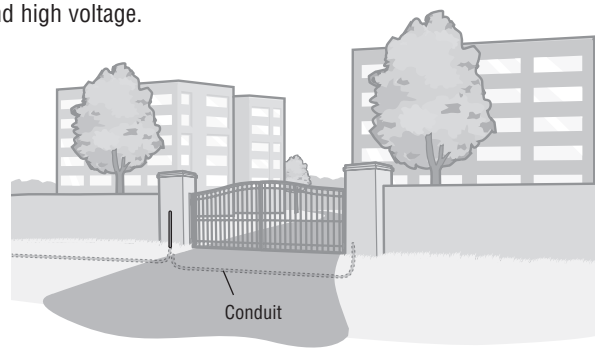

LOOPS

Loops allow the gate to stay open when vehicles are obstructing the gate path. Suggested for vehicles 14 feet (4.27 m) or longer. Loops are not required but are recommended.

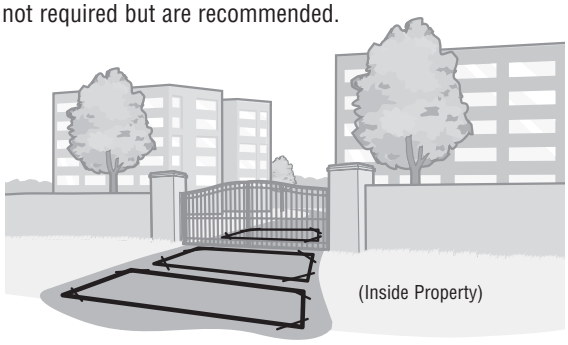

SAFETY

Entrapment protection devices are required to protect against any entrapment or safety conditions encountered in your gate application (refer to pages 18-19 for more details). Install warning signs on both sides of the gate.

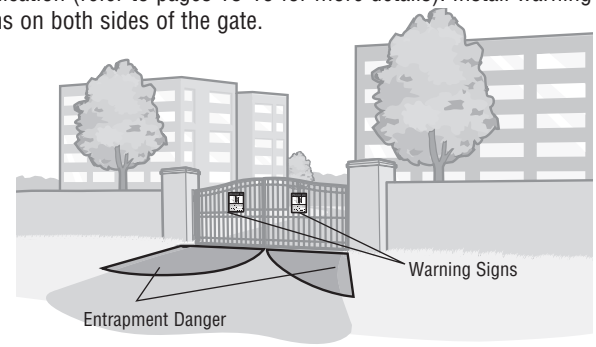

GATE

Gate must be constructed and installed according to ASTM F2200 standards (refer to page 4). Gate must fit specifications of operator (refer to specifications).

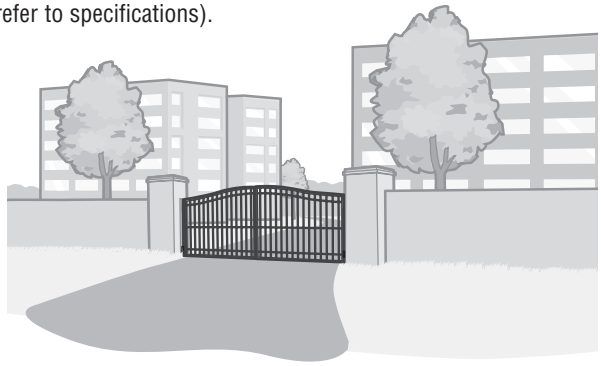

CHECK YOUR GATE

Gate MUST be level. Gate and gate post MUST be plumb. Gate MUST have a smooth bottom edge, no protrusions should exist.

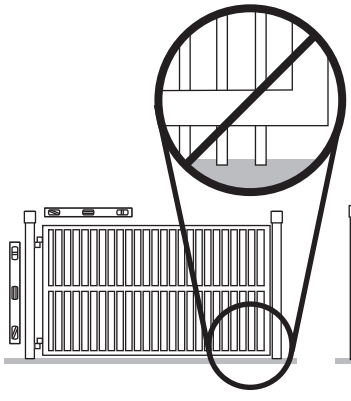

Remove ANY/ALL wheels from the bottom of gate.

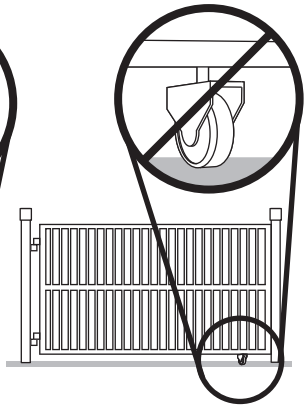

Gate MUST NOT hit or drag across ground.

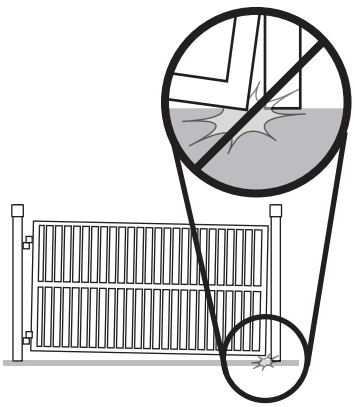

Gate MUST swing freely and be supported entirely by its hinges.

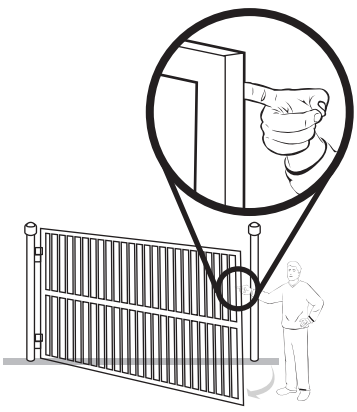

INTRODUCTION

OVERVIEW OF TYPICAL INSTALLATION

Identify your installation type (refer to the Appendix in the back of the manual for more information). All the illustrations on the following pages display a typical Left-Hand Gate installation with a pull-to-open bracket. For Push-to-Open applications refer to the Appendix.

SINGLE GATE

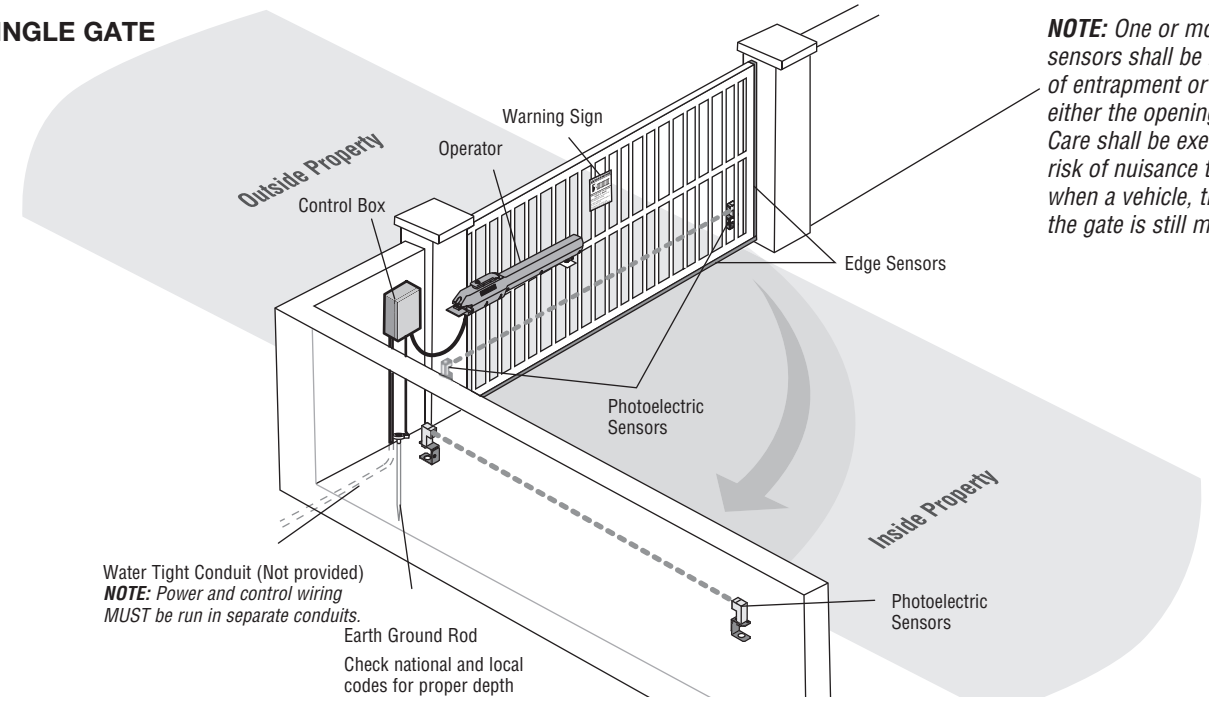

NOTE: *One or more non-contact sensors shall be located where the risk of entrapment or obstruction exists at either the opening or closing direction. Care shall be exercised to reduce the risk of nuisance tripping, such as when a vehicle, trips the sensor while the gate is still moving.*

DUAL GATE

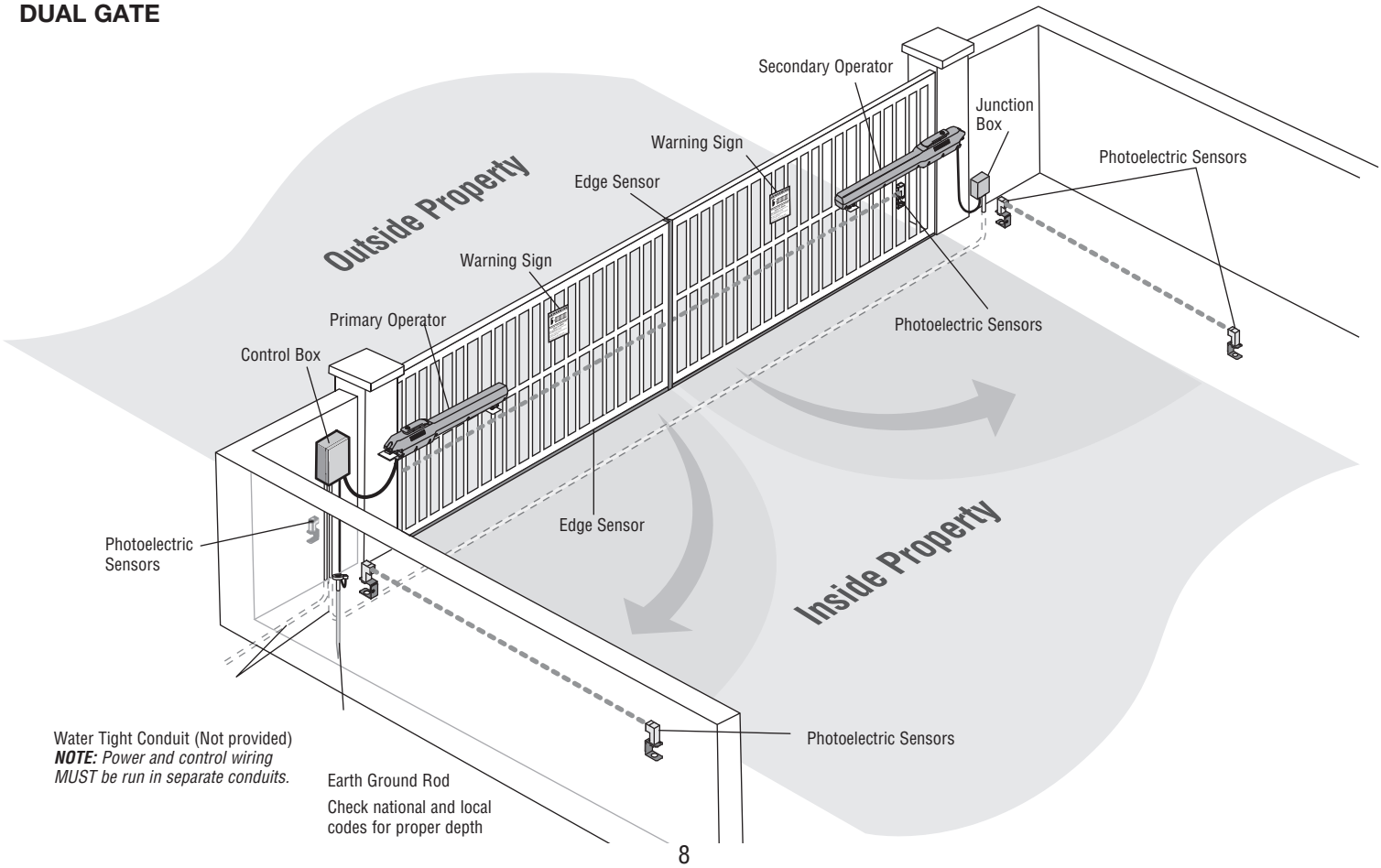

INSTALLATION

IMPORTANT SAFETY INFORMATION

⚠⚠ WARNING

To prevent SERIOUS INJURY or DEATH from a moving gate:

- Pinch points must be guarded at all times. Install enclosed-style gate tracks and roller guards.
- Place screen mesh 6 feet (1.8 m) high on the gate to prevent access through openings anywhere the gate may travel.
- Mount controls at least 6 feet (1.8 m) from the gate or ANY moving part of the gate.
- Install Warning signs on EACH side of gate in PLAIN VIEW. Permanently secure each Warning sign in a suitable manner using fastening holes.
- This operator is intended for vehicular use only. To prevent INJURY to pedestrians, a separate pedestrian access should be supplied, visible from the gate. Locate the pedestrian access where there is not a chance of INJURY at any point during full movement of the gate.
- Contact sensors MUST be located at the leading and trailing edges, and post mounted both inside and outside a horizontal swing gate. Non-contact sensors such as photoelectric sensors MUST be mounted across the gate opening and operate during BOTH the open and close cycles.
- Entrapment protection devices MUST be installed to protect anyone who may come near a moving gate.
- Locate entrapment protection devices to protect in BOTH the open and close gate cycles.
- Locate entrapment protection devices to protect between moving gate and RIGID objects, such as posts or walls.
- Too much force on gate will interfere with proper operation of safety reversal system.
- NEVER increase force beyond minimum amount required to move gate.
- NEVER use force adjustments to compensate for a binding or sticking gate.
- If one control (force or travel limits) is adjusted, the other control may also need adjustment.
- After ANY adjustments are made, the safety reversal system MUST be tested. Gate MUST reverse on contact with a rigid object.

CAUTION

- To AVOID damaging gas, power or other underground utility lines, contact underground utility locating companies BEFORE digging more than 18 inches (46 cm) deep.
- ALWAYS wear protective gloves and eye protection when changing the battery or working around the battery compartment.

INSTALLATION TIPS

DO's

- Weld a horizontal bar across entire gate on any installation for strength. Make sure that the operator is mounted level or it will not function properly.
- Make sure there is slack in the operator cable.
- The operator can be mounted on top of the gate frame.
- The operator must be installed at least 12 inches from the ground.

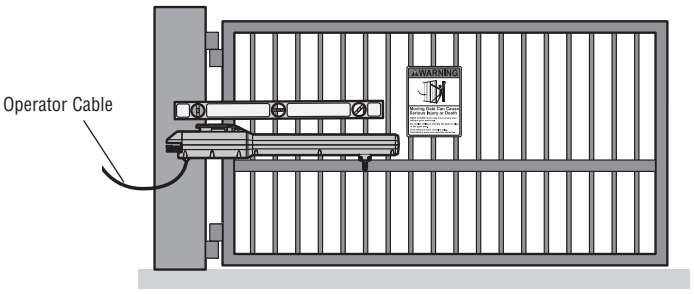

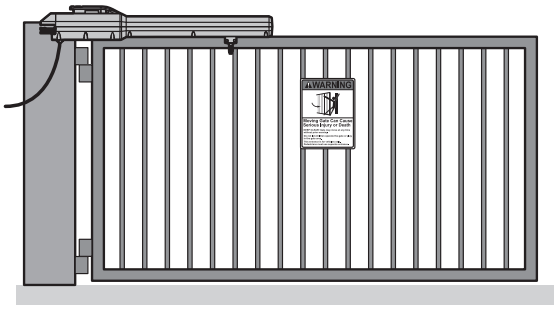

DON'Ts

- DO NOT install upside down.
- DO NOT install next to sprinklers or any area that may expose the bottom of operator to water.
- DO NOT install on uphill or downhill gates.
- DO NOT install on ANY pedestrian passageways, doorways, or gates.
- DO NOT over-bend the operator cable. Doing this will cause the wires to eventually break.
- DO NOT weld the crossbar on just a few pickets, or they could bend.

STEP 1

POSITION THE BRACKETS

If this operator is a replacement for a Miracle-One™ operator, use the existing post bracket and gate bracket. Remove the Miracle-One™ operator from the brackets and proceed to the next step.

If your application is Push-to-Open, refer to the illustrations in the Appendix.

The measurements shown below are typical for a standard installation. Your installation may be different. The gate bracket MUST be installed in an area that can withstand heavy forces. Additional reinforcement steel plates may be necessary for mounting.

1. Close the gate.
2. Choose a vertical mounting location for the post bracket.
3. Place a measuring tape under the center of the gate hinge point and measure out dimension **A** (see chart).
4. Use a screwdriver or dowel rod to temporarily mark the location of the first measurement (Figure 1).
5. Measure out dimension **B** (see chart) from the previous mark. Use a screwdriver to mark the location of the second measurement (Figure 1).
6. Align the post bracket as close as possible above the screwdriver or dowel rod and tack weld the post bracket in the desired vertical position.
7. Position a level on the post bracket and measure 35-1/2 inches (90.2 cm) over from the center hole of the post bracket and mark the location on the gate (Figure 2).
8. Measure 2-1/4 inches (6.4 cm) down from the previous mark and center the bracket on this mark (Figure 3). Tack weld the gate bracket in this position.

NOTES:

- *There should only be a maximum of 4" (10.2 cm) from the center of the hinge to the edge of the post or column (Figure 1). If the distance is greater than 4" (10.2 cm) entrapment protection for this area is required.*
- *While the gate is in the fully open position, the operator needs a clearance of 11-1/4" (28.6 cm) as shown (Figure 2).*

NOTE: *The ideal installation measurements are A = 7-3/4" (19.7 cm) and B = 8-1/2" (21.6 cm). If different measurements are used, the sum of A and B cannot be greater than 18" (45.7 cm).*

DIMENSION CHART	
A	**B**
7-3/4" (19.7 cm)	8-1/2" (21.6 cm)
8-1/2" (21.6 cm)	7-3/4" (19.7 cm)
9" (22.9 cm)	9" (22.9 cm)
9" (22.9 cm)	8-1/2" (21.6 cm)
7-1/2" (19.1 cm)	7-1/2" (19.1 cm)

FIGURE 1 **TOP VIEW OF CLOSED GATE**

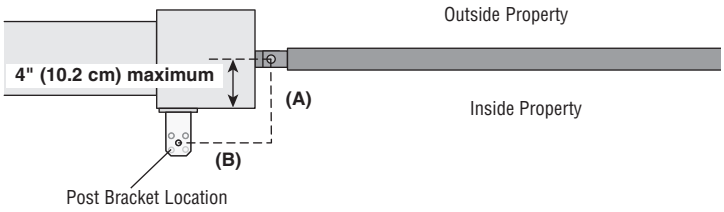

FIGURE 2

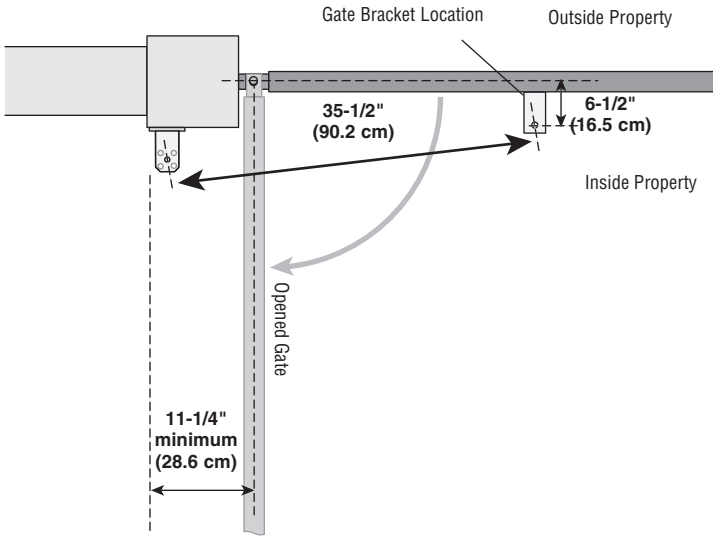

FIGURE 3

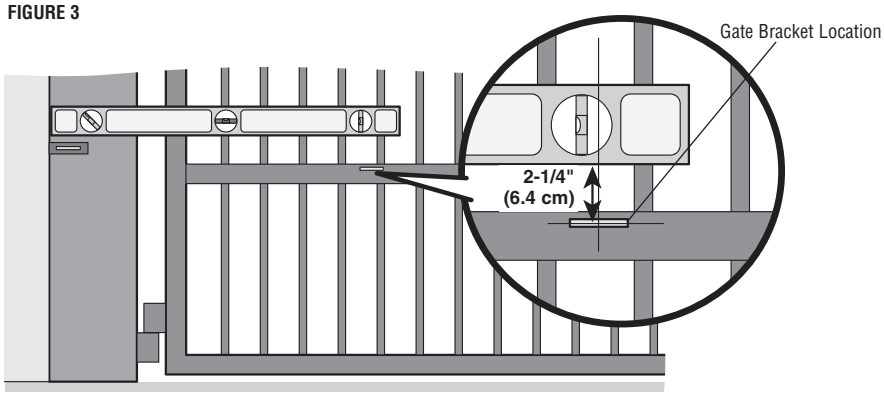

STEP 2

ATTACH THE BRACKETS

1. Insert the key into the lock and turn it 180 degrees counterclockwise. Turn the release lever 180 degrees counterclockwise. The operator is now in manual mode.
2. Position the operator on the brackets and make sure the operator is level and positioned correctly on the gate.
3. Remove the operator from the gate.
4. Completely weld around the post bracket and gate bracket.
   NOTE: *Brackets may need additional reinforcement by welding flat stock as shown.*
5. Attach the operator to the post bracket with the bolt, mounting plate, and nut as shown.
6. Attach gate bracket to operator with the bolt, washer, and nut as shown. Tighten the nut until it reaches the bottom of the gate bracket, then turn the nut a half turn, making sure not to overtighten. Make sure the trolley does not reach the fully open or fully closed position.

   NOTE: *Extra force may be needed to move the trolley back and forth.*

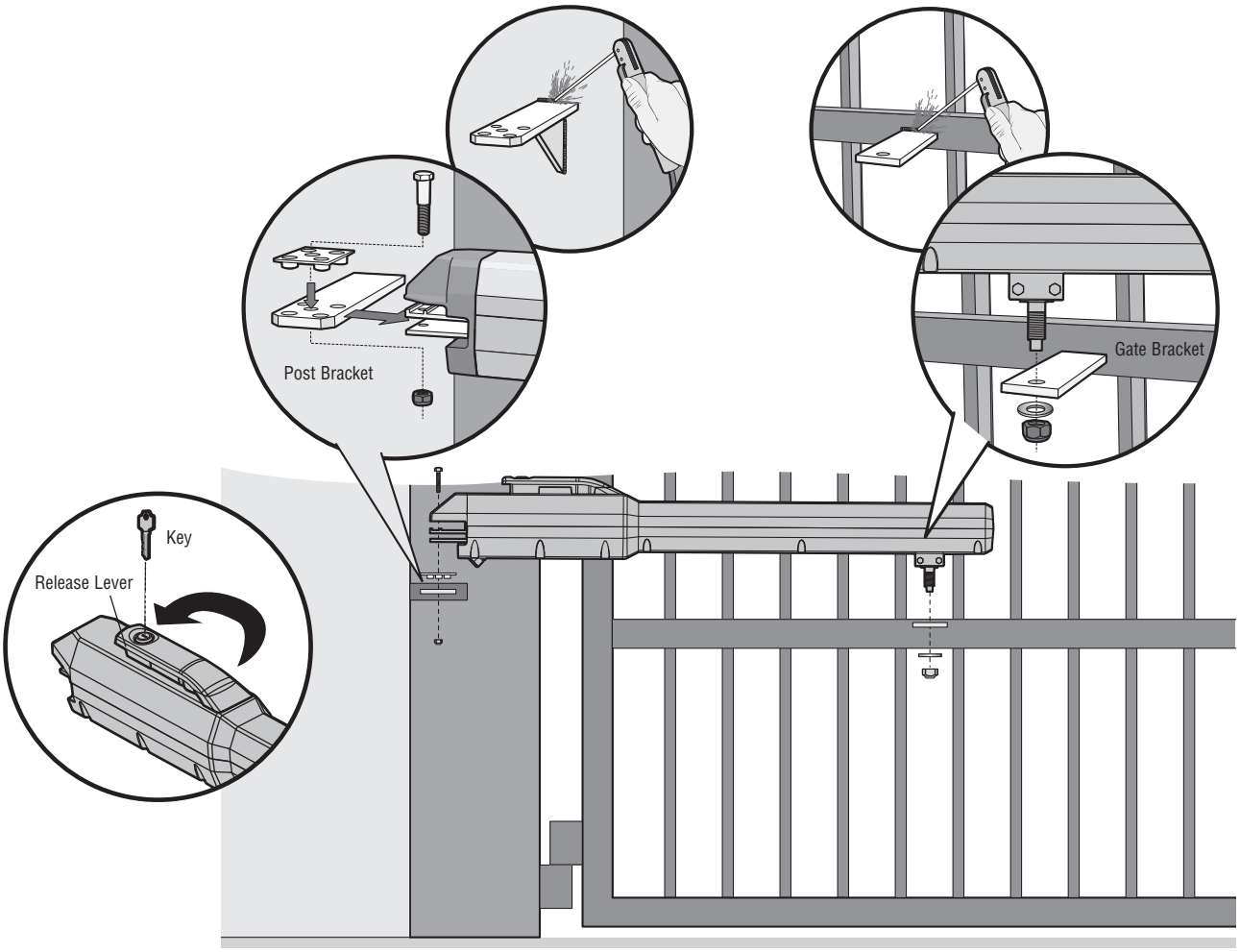

For dual gate applications, repeat the previous installation steps to install the second operator.

STEP 3

INSTALL THE CONTROL BOX

For Large Metal Control Box installation, refer to the following page.

STANDARD CONTROL BOX

The control box MUST be mounted within 5 feet (1.52 m) of the gate operator. Mount the control box as high as possible for best radio reception. Make sure the control box is level. ***NOTE:*** *The expansion board DOES NOT need to be removed for a wall or column mount installation.*

1. Remove the screws and open the control box.
2. Disconnect the "Main Board" connector from the expansion board.
3. Remove the expansion board by removing the screws.
4. Select the mounting holes (according to your application) and remove the knockouts using a screwdriver and hammer.
5. Secure the control box to mounting surface.
   A. Wall or Column: Use the provided screws (4).
   B. Post: Use U-bolts and rubber washers (not provided) to ensure a watertight seal. Make sure the U-bolts do not protrude more than 3/4 inch from the control box because this can short the control board.
6. Reinstall the expansion board and connect the "Main Board" connector to the expansion board.

WALL OR COLUMN MOUNT

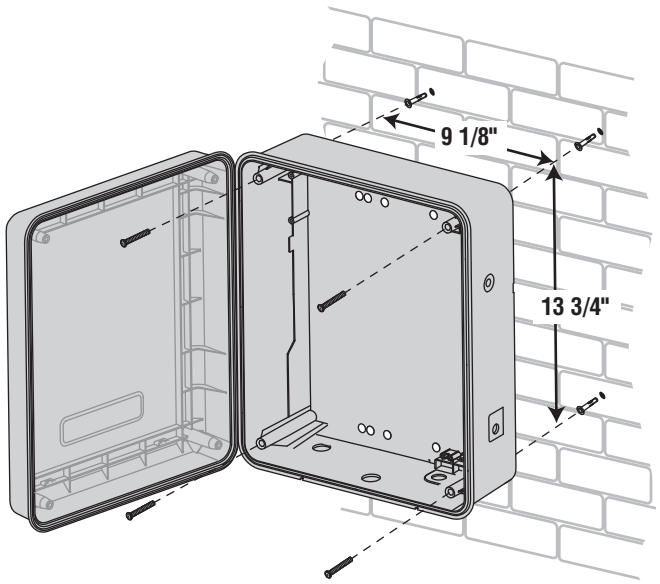

POST MOUNT

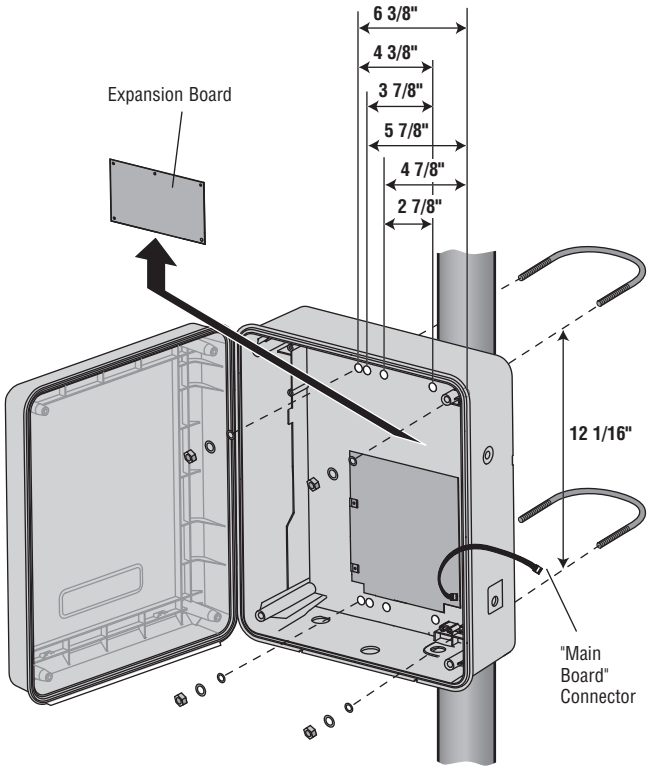

STEP 3 continued...

INSTALL THE CONTROL BOX

LARGE METAL CONTROL BOX

The control box MUST be mounted within 5 feet (1.52 m) of the gate operator. Mount the control box as high as possible for best radio reception. Make sure the control box is level.

NOTE: *The Large Metal Solar Control Box (Model XLSOLARCONTDC) does not have the electrical outlets or the expansion board shown in the images.*

WALL OR COLUMN MOUNT

1. Open the control box. The control box door may be removed by opening the door 90°. Lift the door from the hinges and set aside until the installation is complete.
2. Remove the electrical outlet cover by loosening the screws and sliding the cover up.
3. Use knock outs located at the 4 corners of the control box and knock out using a screwdriver and hammer.
4. Secure the control box to mounting surface using the provided screws (4).

WALL OR COLUMN MOUNT

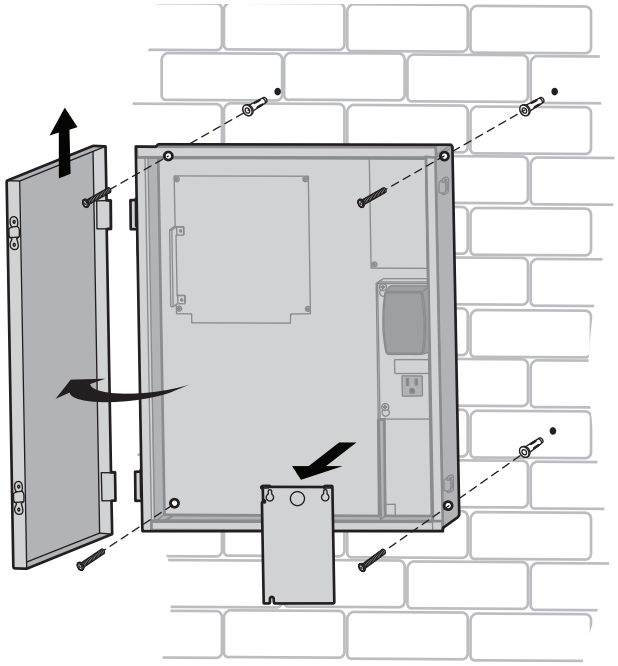

POST MOUNT

NOTE: *The post mount option is not recommended for the 33AH battery application.*

1. Open the control box. The control box door may be removed by opening the door 90°. Lift the door from the hinges and set aside until the installation is complete.
2. The control box can be mounted to a post with 'U' bolts (refer to chart). The knock out will accommodate a 3/8" diameter 'U' bolt. Select center mounting holes (top and bottom) and knock out using a screwdriver and hammer.
3. Secure the control box to mounting surface with U-bolts and rubber washers (not provided) to ensure a watertight seal.

TYPE AND SIZE	'U' BOLT OPENING
Standard 3" Round Pipe	3-1/2"
Standard 4" Square Post	4"
Standard 6" Square Post	6"

POST MOUNT

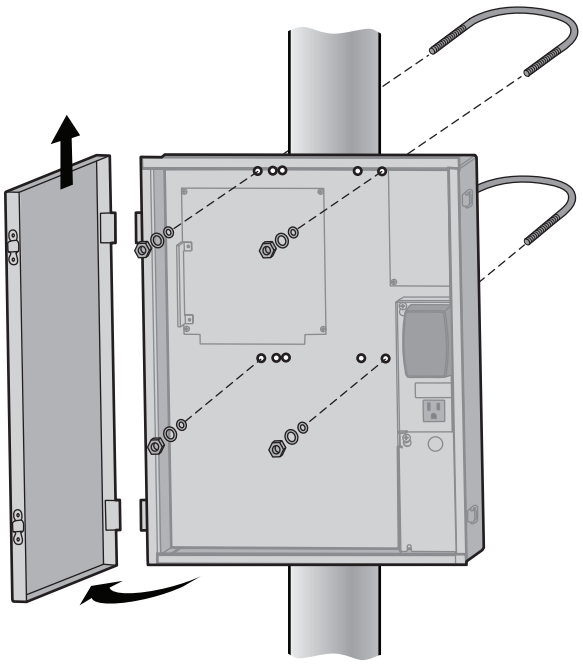

⚠⚠ WARNING

To reduce the risk of SEVERE INJURY or DEATH:

- ANY maintenance to the operator or in the area near the operator MUST NOT be performed until disconnecting the electrical power (AC or solar and battery) and locking-out the power via the operator power switch. Upon completion of maintenance the area MUST be cleared and secured, at that time the unit may be returned to service.
- Disconnect power at the fuse box BEFORE proceeding. Operator MUST be properly grounded and connected in accordance with national and local electrical codes. ***NOTE:*** *The operator should be on a separate fused line of adequate capacity.*
- ALL electrical connections MUST be made by a qualified individual.
- DO NOT install ANY wiring or attempt to run the operator without consulting the wiring diagram. We recommend that you install an edge sensor BEFORE proceeding with the control station installation.
- ALL power wiring should be on a dedicated circuit and well protected. The location of the power disconnect should be visible and clearly labeled.
- ALL power and control wiring MUST be run in separate conduit.

STEP 4

EARTH GROUND ROD

Use the proper earth ground rod for your local area. The ground wire must be a single, whole piece of wire. Never splice two wires for the ground wire. If you should cut the ground wire too short, break it, or destroy its integrity, replace it with a single wire length.

1. Install the earth ground rod within 3 feet of the control box.
2. Run wire from the earth ground rod to the control box. The earth ground wire will be connected in a later step.

NOTE: *If the operator is not grounded properly the range of the remote controls will be reduced.*

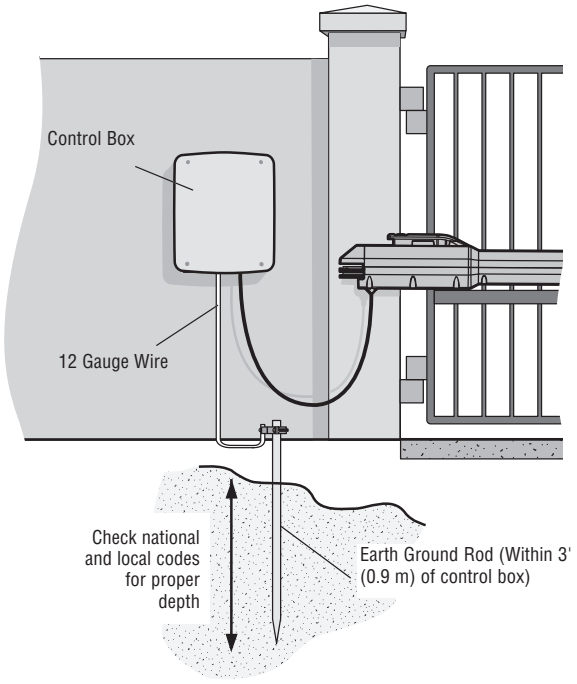

STEP 5

WIRE THE OPERATOR ARM TO THE CONTROL BOARD

1. Choose a knockout in the bottom of the control box.
2. Insert the operator cable through the provided watertight connector.
3. Insert the operator cable and watertight connector into the knockout.
4. Slide the connector nut onto the operator cable.
5. Connect the operator cable wires to the connector according to the colored label on the connector (white to white, red to red, etc.).
6. Plug the connector into the GATE 1 terminal on the control board as shown.
7. Tighten the connector nut.

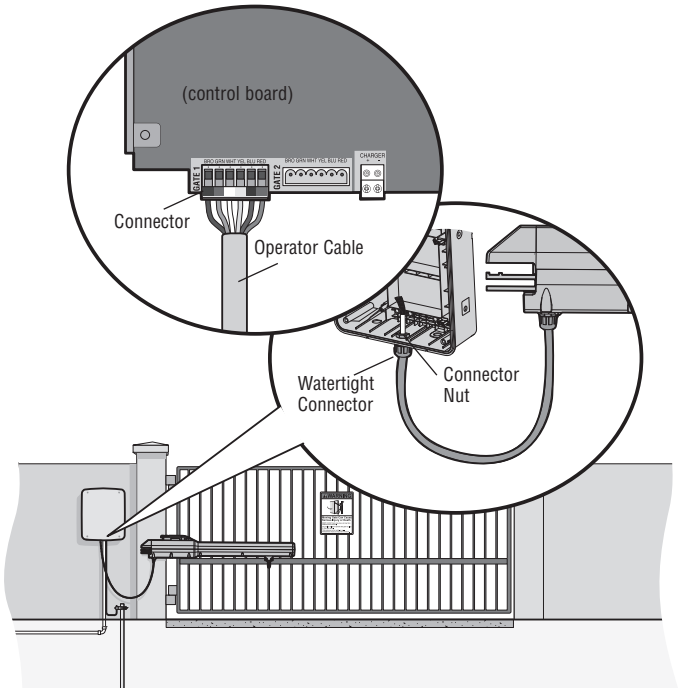

If installing one operator, proceed to page 18. If installing two operators, go to the following page.

STEP 6

DUAL GATES ONLY

There are two options for dual gate communication: wired or wireless. Follow the directions according to your application. Do not use wired and wireless communication simultaneously. Wired dual gate applications will have a longer battery standby time than wireless applications. Wireless dual gates will require the installation of two control boxes, one for each operator arm.

WIRELESS DUAL GATES

INSTALL A SECOND OPERATOR ARM AND CONTROL BOX

Install a second operator arm and control box by following installation steps 1-5.

TO ACTIVATE THE WIRELESS FEATURE

1. Choose a control box to be the network primary operator. All wireless accessories will need to be programmed to the primary control board. ***NOTE:*** *We recommend that all accessories and board configurations are set on the primary control board.*
2. Press and release the LEARN button on the primary control board. The green XMITTER LED will light.
3. Press and release the LEARN button again on the primary control board. The yellow NETWORK LED will light.
4. Press and release the OPEN test button to assign this operator as network primary.
5. Press and release the LEARN button on the secondary control board. The green XMITTER LED will light.
6. Press and release the LEARN button again on the secondary control board. The yellow NETWORK LED will light.
7. Press and release the CLOSE test button to assign this operator as network secondary.

Both operators will beep and the yellow NETWORK LEDs will turn off indicating programming is successful.

TO DEACTIVATE THE WIRELESS FEATURE:

1. Press and release the LEARN button on either control board. The green XMITTER LED will light.
2. Press and release the LEARN button again on the same control board. The yellow NETWORK LED will light.
3. Press and hold the LEARN button for 5 seconds. The yellow NETWORK LED will blink (operator will beep) then turn off indicating successful deactivation.

Repeat the steps for the other control board.

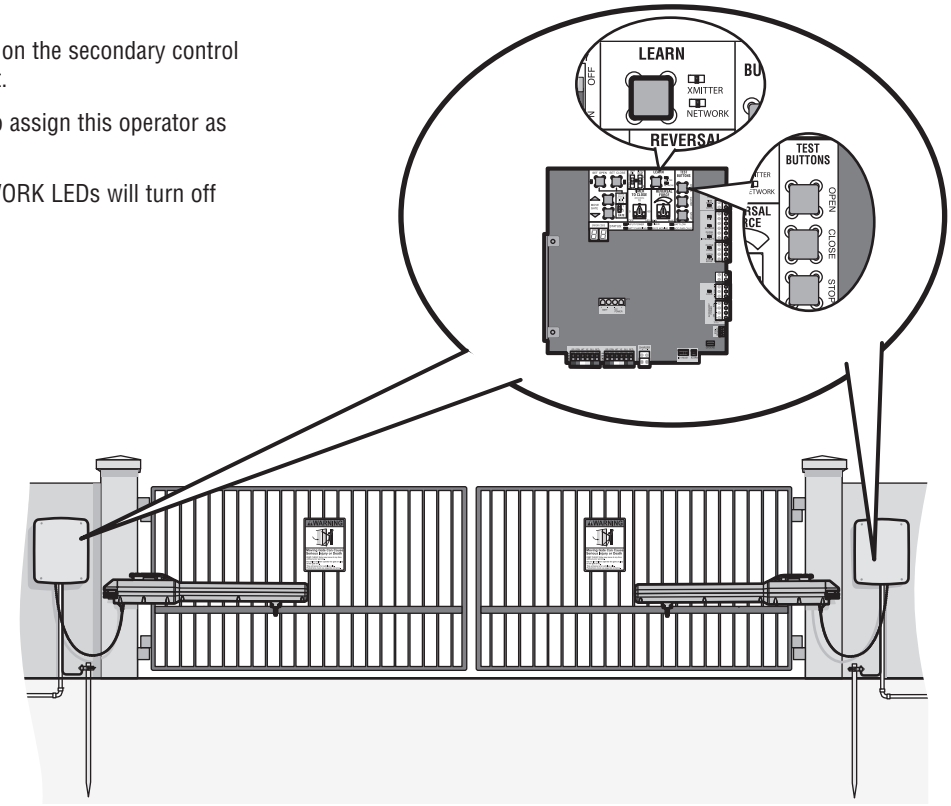

STEP 6 continued...

DUAL GATES ONLY

WIRED DUAL GATES

INSTALL A SECOND OPERATOR ARM

Install a second operator arm by following installation steps 1-2.

INSTALL THE EXTENSION CABLE AND JUNCTION BOX

Before digging, contact local underground utility locating companies.

1. Trench across driveway to bury the extension cable. Use PVC conduit to prevent damage to cables.
2. Open the junction box by removing screws (4) and set aside.
3. Select holes to be used for mounting and knock out using a screwdriver and hammer. Drill two holes in the junction box large enough for the watertight connectors.
4. Mount the junction box within 3 feet (0.9 m) of second operator.
5. Route operator cable and extension cable through watertight connector nut and watertight connector.
6. Insert the cables and watertight connectors into the holes in the junction box.
5. Slide the connector nut onto the operator cable and extension cable.
8. Connect the wires from extension cable and operator cable to the terminal block connector as shown (like-colored wires must face each other).
9. Put wires inside of junction box.
10. Secure operator and extension cables by tightening the connector nut.
11. Reinstall cover.

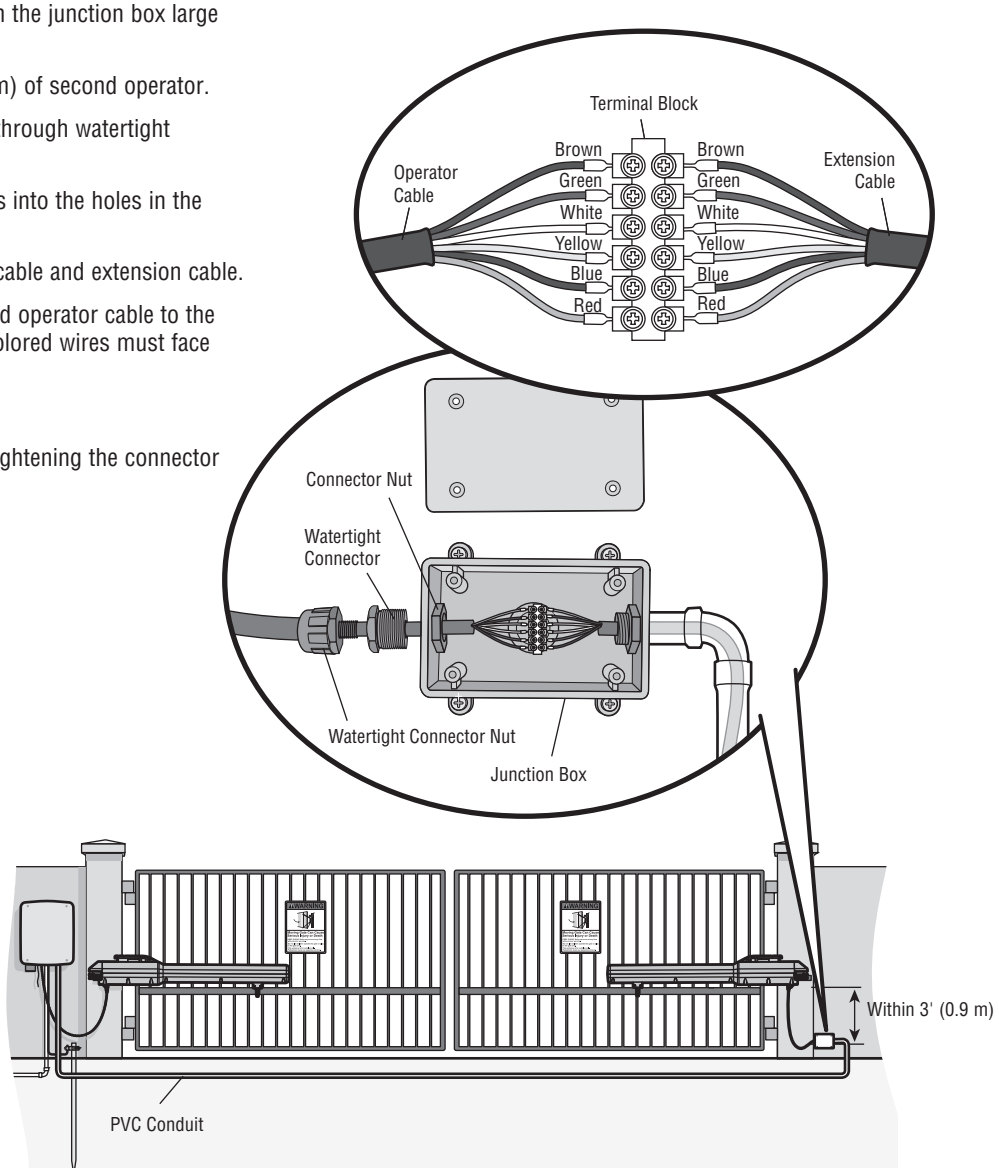

STEP 6 continued...

DUAL GATES ONLY

WIRED DUAL GATES

WIRE THE SECONDARY OPERATOR ARM TO THE CONTROL BOARD

1. Choose a knockout in the bottom of the control box.
2. Insert the extension cable through the watertight connector.
3. Insert the extension cable and watertight connector into the knockout.
4. Slide the connector nut onto the operator cable.
5. Connect the extension cable wires to the connector according to the colored label on the connector (white to white, red to red, etc.).
6. Plug the connector into the GATE 2 terminal on the control board as shown.
7. Tighten the connector nut.

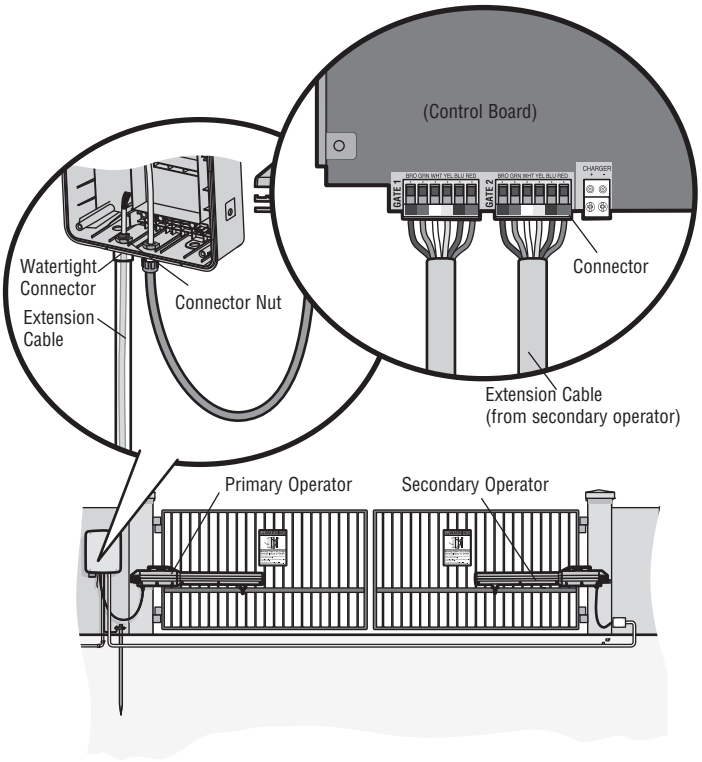

SET THE BIPART DELAY (SINGLE CONTROL BOX)

Occasionally in dual gate installations, one gate will need to open first and close second. This would happen if there was an ornamental overhang on one gate or if using a solenoid lock, for example. This gate is called the Primary gate and needs to be connected to Gate 1 connections on the control board. Thus, it is preferred that the control box be installed on the same side as this gate. If there is no appropriate location on that side for the control box, then mount the control box on the opposite side, but connect the operator closest to the control box to the Gate 2 connector and the operator on the opposite side to the Gate 1 connector.

1. The BIPART DELAY switch on the control board needs to be set to the ON position.

The following illustration shows a dual gate configuration with a decorative overlapping piece on the outside of the gate.

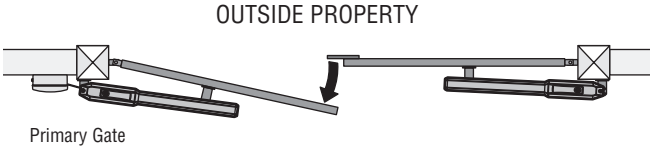

Primary Gate - Connect to Gate 1 Connector on Control Board.

SET THE BIPART DELAY (DUAL CONTROL BOX)

BIPART DELAY/SYNCHRONIZED CLOSE

The LOCK/BIPART DELAY switch is used with dual control box applications and serves two functions:

- **BIPART DELAY:** The BIPART DELAY is used in applications where a mag-lock, solenoid lock, or decorative overlay would require one gate to close before the other. The control box with the LOCK/BIPART DELAY switch ON will delay from the close limit when opening and be the first to close from the open limit.
- **SYNCHRONIZED CLOSE:** The BIPART DELAY is also used in applications where one gate travels a longer distance than the other. To synchronize the closing of the gates, set the LOCK/BIPART DELAY switch to ON for both control boxes.

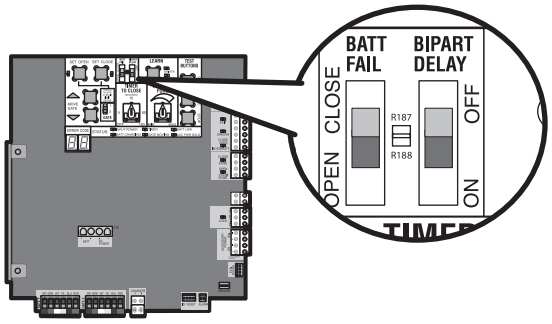

⚠ WARNING

To prevent SERIOUS INJURY or DEATH from a moving gate:

- Entrapment protection devices MUST be installed to protect anyone who may come near a moving gate.
- Locate entrapment protection devices to protect in BOTH the open and close gate cycles.
- Locate entrapment protection devices to protect between moving gate and RIGID objects, such as posts or walls.

STEP 7

INSTALL ENTRAPMENT PROTECTION

At least one external monitored entrapment protection device is required prior to gate movement (effective January of 2016). A monitored device sends a pulsed signal to the operator so the operator is aware of the device. If the operator does not receive the signal from the device it will not run.

An entrapment zone is every location or point of contact where a person can become entrapped between a moving gate and a stationary object. All gate operator systems REQUIRE two independent entrapment protection systems for each entrapment zone. This operator contains an inherent (internal) entrapment protection system and REQUIRES the addition of an external entrapment protection system (non-contact photoelectric sensor or contact edge sensor) for EACH entrapment zone.

Your application may contain one or many entrapment zones. Property owners are obligated to test entrapment protection devices monthly.

NON-CONTACT SENSORS

If the photoelectric sensor beam gets blocked while the gate is moving, the gate will stop and reverse for 4 seconds. The gate will not be able to travel in that direction until the obstruction is cleared. CPS-UN4 or CPS-RPEN4GM monitored photoelectric sensors MUST be used. If a monitored photoelectric sensor is not working or loses power or the beam is blocked, then ALL gate operation in that direction will stop.

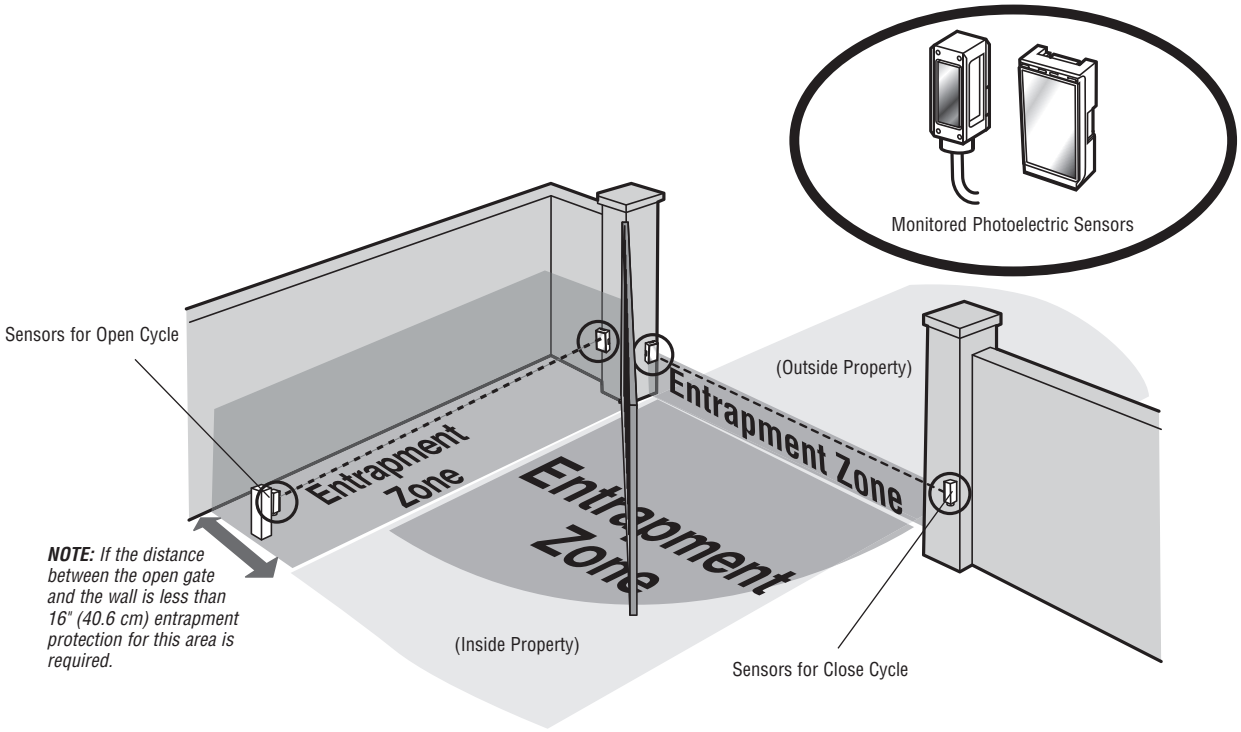

STEP 7 continued...

INSTALL ENTRAPMENT PROTECTION

There are three options for wiring the entrapment protection devices depending on the specific device and how the device will function. Refer to the wiring diagram or the specific entrapment protection device manual for more information. These entrapment protection device inputs are for monitored devices, which include pulsed photoelectric sensors, resistive edge sensors, and pulsed edge sensors. ***NOTE:*** *Only one monitored entrapment protection device may be wired to each input.*

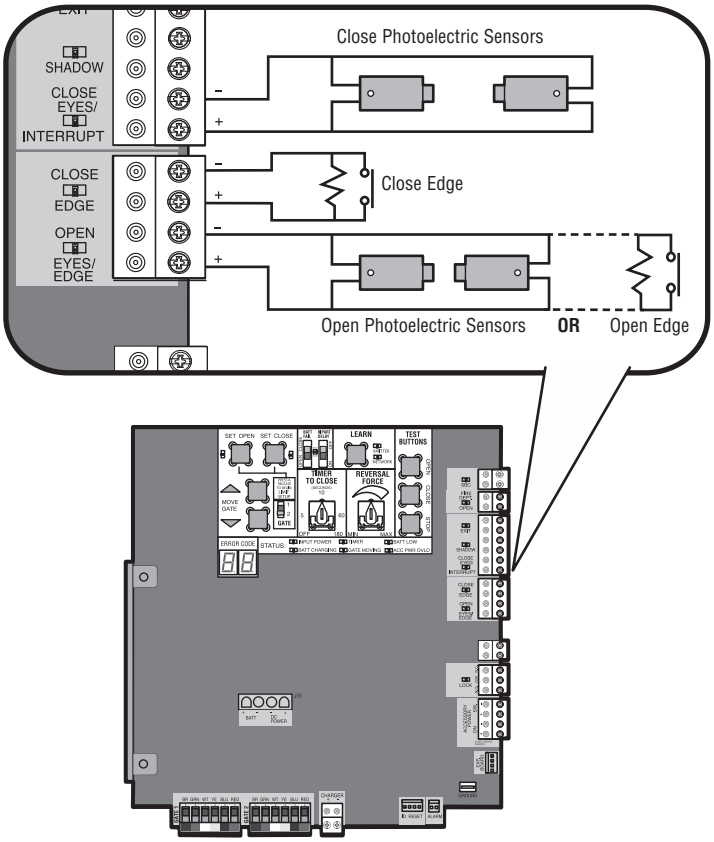

CLOSE EYES/INTERRUPT (2 Terminals)

The CLOSE EYES/INTERRUPT input is for photoelectric sensor entrapment protection for the close direction. When an obstruction is sensed during gate closing the gate will open to the full open position and resets the Timer-to-Close. This input will be disregarded during gate opening.

CLOSE EDGE (2 Terminals)

The CLOSE EDGE input is for edge sensor entrapment protection for the close direction. When an obstruction is sensed during gate closing the gate will reverse for 4 seconds then stop, disengaging the Timer-to-Close. This input will be disregarded during gate opening.

OPEN EYES/EDGE (2 Terminals)

The OPEN EYES/EDGE input is for photoelectric sensor or edge sensor entrapment protection for the open direction. When an obstruction is sensed during gate opening the gate will reverse for 4 seconds then stop. This input will be disregarded during gate closing.

STEP 8

POWER WIRING

The standard control box can be wired for either 120 Vac or 240 Vac. Factory default is 120 Vac. The Large Metal Control Box (XLM) can be wired for 120 Vac (default).

The batteries are charged in the circuit by the toroid transformer, plug-in transformer, or the solar panels. Main power supply and control wiring MUST be run in separate conduits.

SOLAR APPLICATIONS: For solar applications refer to Solar Panels section in the Appendix, pages 45-49. Follow the directions according to your application.

NOTE: *If using an external receiver use shielded wire for the connections or mount the receiver away from the operator to avoid interference with the operator.*

OPERATOR POWER SOURCE	
120 VAC	
Wire Gauge 14	**350 feet (107 m)**
Wire Gauge 12	**525 feet (160 m)**
Wire Gauge 10	**850 feet (259 m)**
OR	
240 VAC	
Wire Gauge 14	**1,150 feet (351 m)**
Wire Gauge 12	**1,850 feet (564 m)**
Wire Gauge 10	**2,950 feet (899 m)**

NOTE: *Use copper conductors ONLY.*

STANDARD CONTROL BOX

1. Turn off the AC power from the main power source circuit breaker.
2. Run the AC power wires to the control box.
3. Remove the toroid assembly from the control box by loosening the four screws and lifting the assembly up and out.
4. Ensure the 120/240 plug is connected to either the 120 or 240 Vac connector on the EMI board depending on your application. Factory default is 120 Vac.
5. Connect the ground wire to the ground screw on the back of the toroid assembly.
6. Connect the white wire from the toroid assembly to NEUTRAL using a wire nut.
7. Connect the black wire from the toroid assembly to HOT using a wire nut.
8. Replace the toroid assembly and tighten the four screws. Ensure the wires are not pinched.
9. Plug the J15 plug into the control board. The control board will power up. ***NOTE:*** *You may see a small spark when plugging the J15 plug into the board.*
10. Turn ON AC power to the operator.

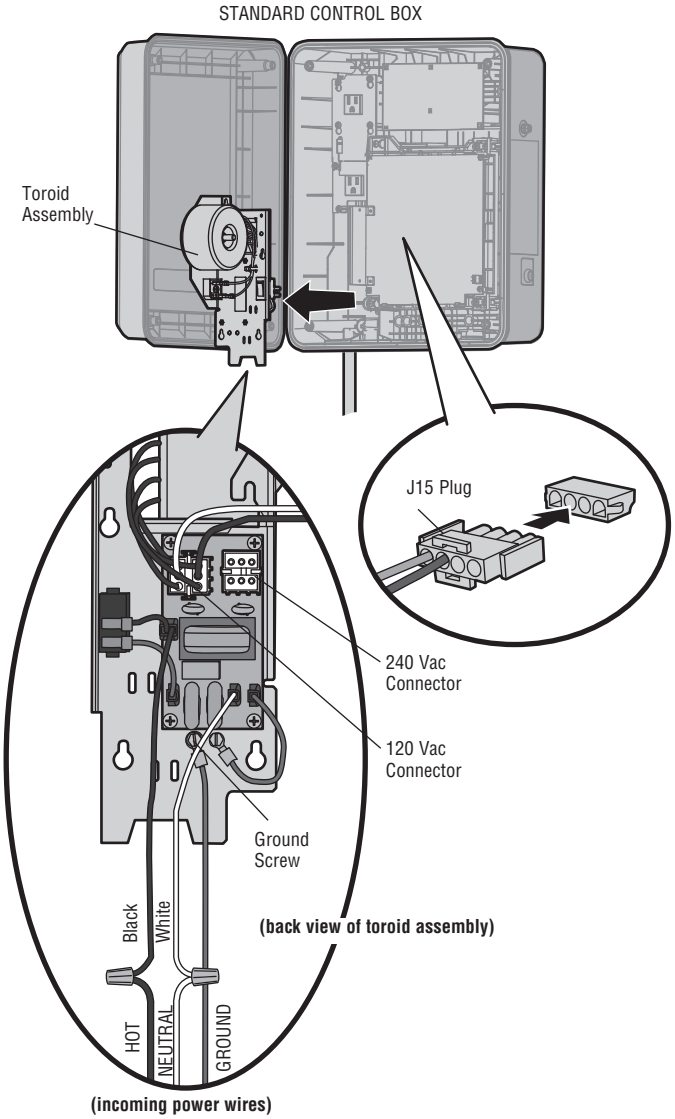

STEP 8 continued...

POWER WIRING

LARGE METAL CONTROL BOX

To use solar panels with the Large Metal Control Box (Model XLSOLARCONTDC) skip the steps below and refer to the Solar Panels section in the Appendix, pages 45-49.

1. Turn OFF AC power to the operator at the circuit breaker and unplug the transformer.
2. Run the AC power wires to the control box.
3. Remove the junction box cover.
4. Connect the green wire to the earth ground rod wire using a wire nut.
5. Connect the white wire to NEUTRAL using a wire nut.
6. Connect the black wire to HOT using a wire nut.
7. Replace the junction box cover. Ensure the wires are not pinched.
8. Unplug the J15 plug labeled BATT(-)(+) DC(-)(+) on the control board by squeezing the plug and pulling it from the control board.
9. Connect a jumper between the positive (+) terminal of one battery to the negative (-) terminal of the other battery.
10. Connect the red wire from the J15 plug labeled BATT (+) to the positive (+) terminal of the battery.
11. Connect the black wire from the J15 plug labeled BATT (-) to the negative (-) terminal of the battery.
12. Plug the J15 plug into the control board. The control board will power up. ***NOTE:*** *You may see a small spark when plugging the J15 plug into the board.*
13. Plug the transformer in.
14. Turn ON AC power.

LARGE METAL CONTROL BOX (LA500CONTXLMDC)

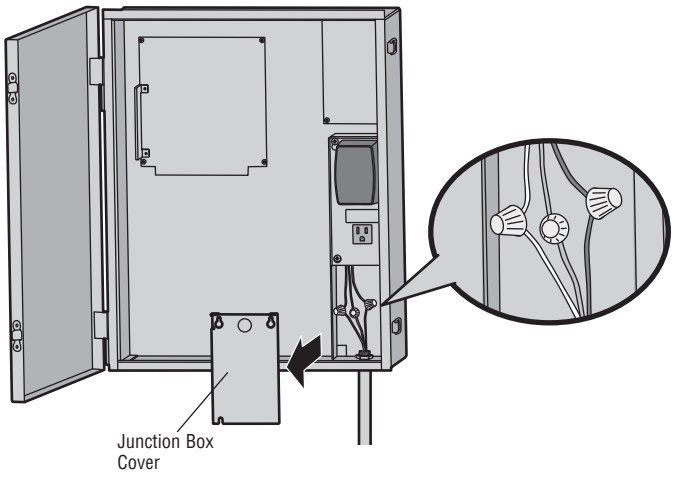

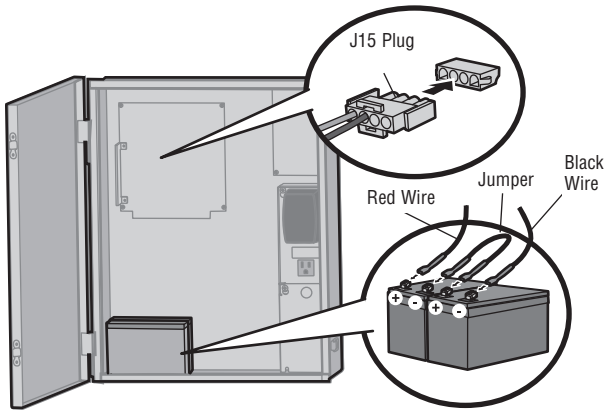

INSTALLATION

STEP 9

FINISH INSTALL

1. Turn the release lever clockwise 180° back to the engaged position. This engages the motor.
2. Turn the key clockwise 180°. This locks the release lever. The operator is now engaged.
3. Fasten warning signs to the gate with cable ties. Warning signs MUST be installed on both sides of the gate and in plain view.

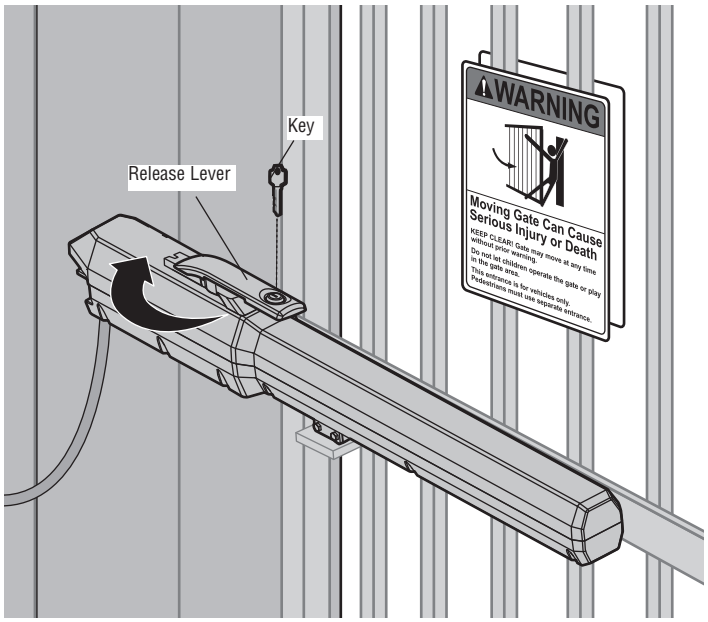

ADJUSTMENT

LIMIT AND FORCE ADJUSTMENT

⚠ WARNING

To reduce the risk of SEVERE INJURY or DEATH:

- Without a properly installed safety reversal system, persons (particularly small children) could be SERIOUSLY INJURED or KILLED by a moving gate.
- Too much force on gate will interfere with proper operation of safety reversal system.
- NEVER increase force beyond minimum amount required to move gate.
- NEVER use force adjustments to compensate for a binding or sticking gate.
- If one control (force or travel limits) is adjusted, the other control may also need adjustment.
- After ANY adjustments are made, the safety reversal system MUST be tested. Gate MUST reverse on contact with a rigid object.

INTRODUCTION

Your operator is designed with electronic controls to make travel limit and force adjustments easy. The adjustments allow you to program where the gate will stop in the open and close position. The electronic controls sense the amount of force required to open and close the gate. The force is adjusted automatically when you program the limits but should be fine tuned using the REVERSAL FORCE dial on the control board (refer to Fine Tune the Force section) to compensate for environmental changes.

The limits can be set using the control board (following page) or a remote control (refer to Limit Setup with a Remote Control in the Appendix). Setting the limits with a remote control requires a 3-button remote control programmed to OPEN, CLOSE, and STOP.

NOTE: *The Test Buttons on the control board will not work until the limits have been set.*

LIMIT AND FORCE ADJUSTMENT continued...

For dual gate applications the limits will have to be set for each operator. The gate MUST be attached to the operator before setting the limits and force.

INITIAL LIMITS AND FORCE ADJUSTMENT

If a mistake is made while programming the limits press the reset button to start over.

1. Set the GATE switch to the 1 position.
2. Press and release the SET OPEN and SET CLOSE buttons simultaneously to enter limit setting mode.
3. Press and hold the MOVE GATE buttons to move the gate to the open or close limit.
4. Press and release the SET CLOSE or SET OPEN button depending on which limit is being set.
5. Press and hold the MOVE GATE button to move the gate to the other limit.
6. Press and release the SET CLOSE or SET OPEN button depending on which limit is being set. The operator will exit limit setting mode.*
7. Cycle the gate open and close using the TEST BUTTONS. This automatically sets the force.
8. For dual gates set the Gate switch to the 2 position and repeat steps 2-7.

When limits are set properly the operator will automatically exit limit setting mode.

* ***Dual Gates ONLY:*** *When the limits are set on the secondary gate first the control board will not exit the limit setting mode until the limits are set on the primary gate.*

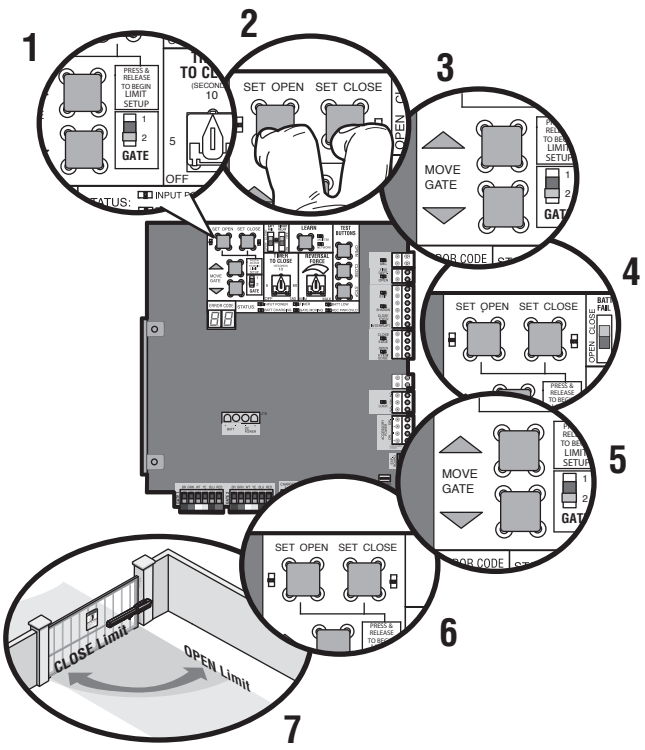

LIMIT SETUP LEDS			
SET OPEN LED	**SET CLOSE LED**	**OPERATOR MODE**	**EXPLANATION**
OFF	OFF	NORMAL MODE	Limits are set.
BLINKING	BLINKING	LIMIT SETTING MODE	Limits are not set.
BLINKING	ON	LIMIT SETTING MODE	Open limit is not set.
ON	BLINKING	LIMIT SETTING MODE	Close limit is not set.
ON	ON	LIMIT SETTING MODE	Limits are set.

LIMIT AND FORCE ADJUSTMENT continued...

FINE TUNE THE FORCE

The REVERSAL FORCE DIAL on the control board is used for fine tuning the force in cases where wind or environmental changes may affect the gate travel.

Based on the length and weight of the gate it may be necessary to make additional force adjustments. The force setting should be high enough that the gate will not reverse by itself nor cause nuisance interruptions, but low enough to prevent serious injury to a person. The force setting is the same for both the open and close gate directions.

1. Open and close the gate with the test buttons.
2. If the gate stops or reverses before reaching the fully open or closed position, increase the force by turning the force control slightly clockwise.
3. Perform the “Obstruction Test” after every force setting adjustment (see below).

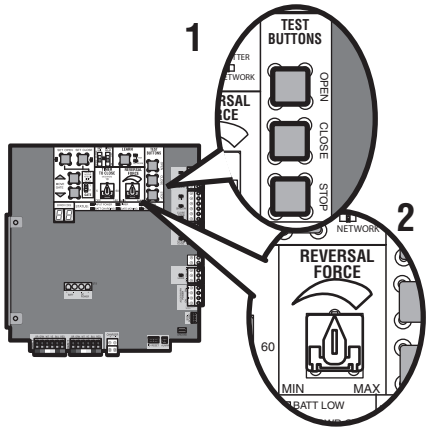

ADJUST THE LIMITS

After both limits are set and the operator is ready to run, one limit can be adjusted independently from the other by following steps 1-3 of the Initial Limit and Force Adjustment section, on page 23.

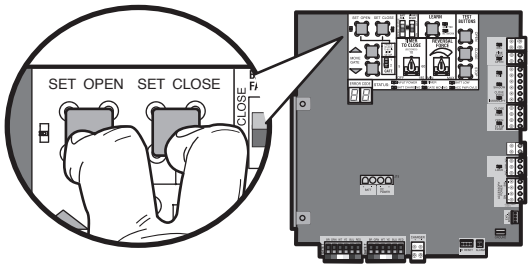

OBSTRUCTION TEST

The operator is equipped with an automatic obstruction sensing feature. If the gate encounters an obstruction during motion, the operator will automatically reverse direction of the gate for a short time and then stop the gate. After any adjustments are made, test the operator:

1. Open and close the gate with the test buttons, ensuring that the gate is stopping at the proper open and close limit positions.
2. Place a solid object between the open gate and a rigid structure. Ensure that the gate, the solid object, and the rigid structure can withstand the forces generated during this obstruction test.
3. Run the gate in the close direction. The gate should stop and reverse upon contact with the solid object. If the gate does not reverse off the solid object, reduce the force setting by turning the force control slightly counter-clockwise. The gate should have enough force to reach both the open and close limits, but MUST reverse after contact with a solid object.
4. Repeat the test for the open direction.

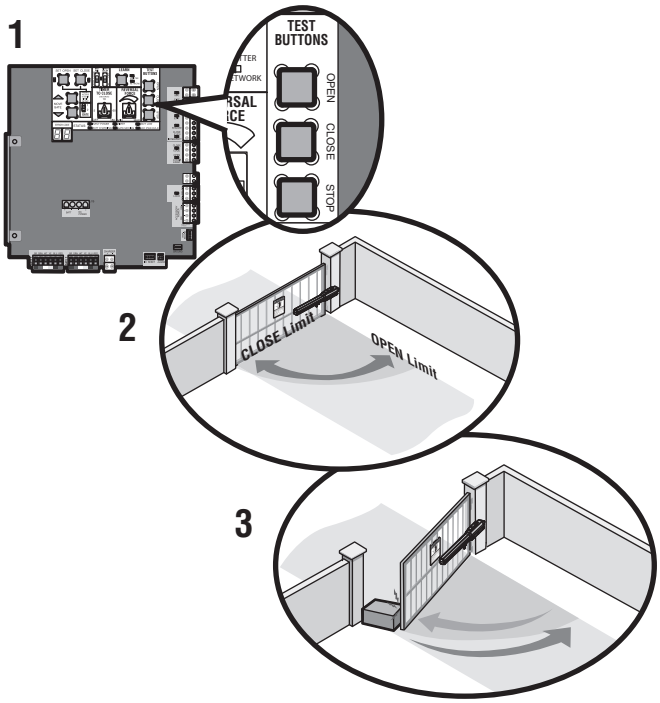

PROGRAMMING

REMOTE CONTROLS (NOT PROVIDED)

A total of 50 Security✚ 2.0™ remote controls and 2 keyless entries (1 PIN for each keyless entry) can be programmed to the operator. When programming a third keyless entry to the operator, the first keyless entry will be erased to allow the third keyless entry to be programmed. When the operator's memory is full it will exit the programming mode and the remote control will not be programmed. The memory will need to be erased before programming any additional remote controls. ***NOTE:*** *If installing an 86LM to extend the range of the remote controls DO NOT straighten the antenna.*

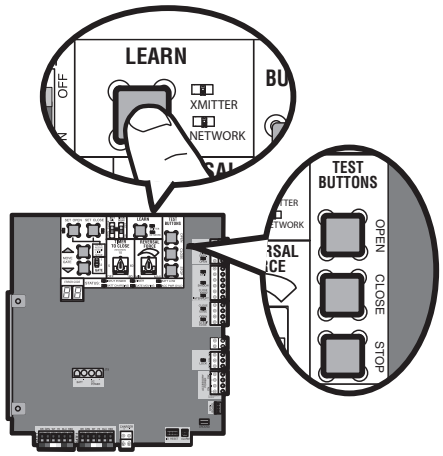

There are 3 different options for programming the remote control depending on how you would like the remote control to function. Choose a programming option:

OPTION	DESCRIPTION	PROGRAMMING STEPS
Single button as OPEN only	Program a single button on the remote control for open only. The Timer-to-Close can be set to close the gate.	1. Press and release the LEARN button (operator will beep and green XMITTER LED will light). 2. Press the OPEN button. 3. Press the remote control button that you would like to program.
Single button (SBC) as OPEN, CLOSE, and STOP	Program one remote control button as an open, close, and stop.	1. Press and release the LEARN button (operator will beep and green XMITTER LED will light). 2. Press the remote control button that you would like to program.
Three separate buttons as OPEN, CLOSE, and STOP	Program each remote control button as an open, close, and stop.	1. Press and release the LEARN button (operator will beep and green XMITTER LED will light). 2. Press the OPEN, CLOSE, or STOP button, depending on the desired function. 3. Press the remote control button that you would like to program.

The operator will automatically exit learn mode (operator will beep and green XMITTER LED will go out) if programming is successful. To program additional Security✚ 2.0™ remote controls or remote control buttons, repeat the programming steps above.

NOTICE: To comply with FCC and/or Industry Canada (IC) rules, adjustment or modifications of this transceiver are prohibited. THERE ARE NO USER SERVICEABLE PARTS. Any changes or modifications not expressly approved by the party responsible for compliance could void the user's authority to operate the equipment.

This device complies with Part 15 of the FCC rules and IC RSS-210. Operation is subject to the following two conditions: (1) this device may not cause harmful interference, and (2) this device must accept any interference received, including interference that may cause undesired operation.

This Class B digital apparatus complies with Canadian ICES-003.

PROGRAMMING

LIFTMASTER INTERNET GATEWAY (NOT PROVIDED)

To program the operator to the LiftMaster Internet Gateway:

USING THE LEARN BUTTON ON THE OPERATOR'S CONTROL BOARD

1. Connect the ethernet cable to the LiftMaster Internet Gateway and the router.
2. Connect power to the LiftMaster Internet Gateway.
3. Create an online account by visiting www.myliftmaster.com.
4. Register the LiftMaster Internet Gateway.
5. Use an internet enabled computer or smartphone to add devices. The LiftMaster Internet Gateway will stay in learn mode for three minutes.
6. Press the Learn button twice on the primary operator (the operator will beep as it enters learn mode). The LiftMaster Internet Gateway will pair to the operator if it is within range and the operator will beep if programming is successful.

USING THE RESET BUTTON ON THE OPERATOR

1. Connect the ethernet cable to the LiftMaster Internet Gateway and the router.
2. Connect power to the LiftMaster Internet Gateway.
3. Create an online account by visiting www.myliftmaster.com.
4. Register the LiftMaster Internet Gateway.
5. Use an internet enabled computer or smartphone to add devices. The LiftMaster Internet Gateway will stay in learn mode for three minutes.
6. Ensure gate is closed.
7. Give the operator an OPEN command.
8. Within 30 seconds, when the gate is at the open limit press and release the reset button 3 times (on primary gate) to put primary operator into High Band Learn Mode (the operator will beep as it enters learn mode). The LiftMaster Internet Gateway will pair to the operator if it is within range and the operator will beep if programming is successful.

The status as shown by the LiftMaster Internet Gateway app will be either "open" or "closed". The gate operator can then be controlled through the LiftMaster Internet Gateway app.

ERASE ALL CODES

1. Press and release the LEARN button (operator will beep and green XMITTER LED will light).
2. Press and hold the LEARN button again until the green XMITTER LED flashes and then release the button (approximately 6 seconds). All remote control codes are now erased.

ERASE LIMITS

1. To erase the limits, press and hold the SET OPEN and SET CLOSE buttons simultaneously (5 seconds) until both the SET OPEN and SET CLOSE LEDs blink rapidly and the operator beeps.
2. Release the buttons and the SET OPEN and SET CLOSE LEDs will blink slowly indicating the limits will need to be set.

TO REMOVE AND ERASE MONITORED ENTRAPMENT PROTECTION DEVICES

1. Remove the entrapment protection device wires from the terminal block.
2. Press and release the SET OPEN and SET CLOSE buttons simultaneously. The SET OPEN and SET CLOSE LEDs will turn on (entering learn limit mode).
3. Press and release both SET OPEN and SET CLOSE buttons again to turn off the SET OPEN and SET CLOSE LEDs (exiting learn limit mode).

GATE OPERATOR SETUP EXAMPLES

The following are example setups for the gate operator. Your specific site requirements may be different. Always setup the operator system to the site requirements, including all necessary entrapment protection devices.

RESIDENTIAL: One to four residential homes sharing a gated entrance/exit, allowing vehicle access trumps security concerns

COMMERCIAL/GENERAL ACCESS: A residential community (more than four homes) having one or more gated entrances/exits, allowing vehicle access trumps security concerns

COMMERCIAL: Business site where security (gate closed) is important

INDUSTRIAL: Large business site where security is required

SETTING	RESIDENTIAL	COMMERCIAL/GENERAL ACCESS	COMMERCIAL	INDUSTRIAL
Quick Close switch setting	Normally set to OFF. Normal gate close (timer or control).	Normally set to OFF. Normal gate close (timer or control).	Normally set to OFF. Normal gate close (timer or control).	Set to ON, so that gate closes immediately after vehicle passes interrupt loop.
AC Fail switch setting	Normally set to BATT. Run on battery if AC power fails.	Normally set to BATT. For local jurisdiction requirement, set to OPEN so that the gate will open approximately 15 seconds after AC power fail.	Normally set to BATT. Run on battery if AC power fails.	Normally set to BATT. Run on battery if AC power fails.
Low Battery switch setting	Normally set to OPEN. If powered from battery and battery is low, gate automatically opens and stays open.	Normally set to OPEN. If powered from battery and battery is low, gate automatically opens and stays open.	Normally set to CLOSE. If powered from battery and battery is low, gate stays closed.	Normally set to CLOSE. If powered from battery and battery is low, gate stays closed.
Anti-Tail switch setting	Normally set to OFF. Interrupt loop reverses a closing gate.	Normally set to OFF. Interrupt loop reverses a closing gate.	Set to ON. In attempt to prevent vehicle tail-gating, interrupt loop pauses a closing gate.	Set to ON. In attempt to prevent vehicle tail-gating, interrupt loop pauses a closing gate.
Bipart Delay switch setting	For DUAL-GATE site, set to ON for gate that delays upon opening.	For DUAL-GATE site, set to ON for gate that delays upon opening.	For DUAL-GATE site, set to ON for gate that delays upon opening.	For DUAL-GATE site, set to ON for gate that delays upon opening.
Aux Relay Out – Open Limit Switch	Typically not required.	Use with SAMS (Sequence Access Management System).	1) Use with SAMS (Sequence Access Management System) 2) Connect “Gate Open” indicator (e.g. light)	1) Use with SAMS (Sequence Access Management System) 2) Connect “Gate Open” indicator (e.g. light)
Aux Relay Out – Close Limit Switch	Typically not required.	Typically not required.	Connect “Gate Close/ Secure” indicator (e.g. light).	Connect “Gate Close/Secure” indicator (e.g. light).
Aux Relay Out – Gate Motion	Attach alert signal (audible or visual alert system).	Attach alert signal (audible or visual alert system).	Attach alert signal (audible or visual alert system).	Attach alert signal (audible or visual alert system).
Aux Relay Out – Pre-Motion Delay	Attach alert signal (audible or visual alert system).	Attach alert signal (audible or visual alert system).	Attach alert signal (audible or visual alert system).	Attach alert signal (audible or visual alert system).
Aux Relay Out – Power	Attach visual alert to know when system is charging batteries (i.e. not running on batteries).	Attach visual alert to know when system is charging batteries (i.e. not running on batteries).	Attach visual alert to know when system is charging batteries (i.e. not running on batteries).	Attach visual alert to know when system is charging batteries (i.e. not running on batteries).
Aux Relay Out – Tamper	Attach alert signal (audible or visual alert system) to indicate if gate is manually tampered with by being pushed off of close limit.	Attach alert signal (audible or visual alert system) to indicate if gate is manually tampered with by being pushed off of close limit.	Attach alert signal (audible or visual alert system) to indicate if gate is manually tampered with by being pushed off of close limit.	Attach alert signal (audible or visual alert system) to indicate if gate is manually tampered with by being pushed off of close limit.
Cycle Quantity Feedback	Use during servicing only to determine operator cycles.	Use during servicing only to determine operator cycles.	Use during servicing only to determine operator cycles.	Use during servicing only to determine operator cycles.
Fire Dept Open input	Typically not required.	Connect emergency access system (Knox box switch, SOS system, etc.)	Typically not required.	Typically not required.

OPERATION

CONTROL BOARD OVERVIEW

1 **SET OPEN Button:** The SET OPEN button sets the OPEN limit. See Adjust Limits section.

2 **SET CLOSE Button:** The SET CLOSE button sets the CLOSE limit. See Adjust Limits section.

3 **MOVE GATE Buttons:** The MOVE GATE buttons will either open or close the gate when the operator is in Limit setting mode. See Adjust Limits section.

4 **BATT FAIL:**

- When AC power is OFF and battery voltage is critically low the gate will latch at a limit until AC power is restored or batteries voltage increases.
- Option select switch set to OPEN forces gate to automatically open and then latch at the OPEN limit until AC power is restored or battery voltage increases.
- Option select switch set to CLOSE forces gate to latch at CLOSE limit if at CLOSE limit or on next CLOSE command until AC power restored or battery voltage increases.
- Constant pressure on a hard command input overrides to open or close the gate.
- Critically low battery is less than 23 V

5 **BIPART DELAY Switch:** The LOCK/BIPART DELAY switch is used only for dual gates. See Bipart Delay section.

6 **LEARN Button:** The LEARN button is for programming remote controls and the network.

7 **TIMER-TO-CLOSE dial:** The TIMER-TO-CLOSE (TTC) dial can be set to automatically close the gate after a specified time period. The TTC is factory set to OFF. If the TTC is set to the OFF position, then the gate will remain open until the operator receives another command from a control. Rotate the TIMER-TO-CLOSE dial to the desired setting. The range is 0 to 180 seconds, 0 seconds is OFF.
NOTE: *Any radio command, single button control, or CLOSE command on the control board prior to the TTC expiring will close the gate. The TTC is reset by any signals from the open controls, loops, close edges, and close photoelectric sensors (IR's).*

8 **REVERSAL FORCE dial:** The REVERSAL FORCE dial adjusts the force. See Force Adjustment section.

9 **TEST BUTTONS:** The TEST BUTTONS will operate the gate (OPEN, STOP and CLOSE).

10 **STATUS LEDs:** The STATUS LEDs are diagnostic codes for the operator. See Status LED Chart in the Troubleshooting section.

11 **Error Code Display:** The error code display will show the operator type, firmware version, and error codes. The operator type will display as "LA" followed by a "50" which indicates the operator type as LA500DC. The firmware version will show after the operator type, example "1.2".

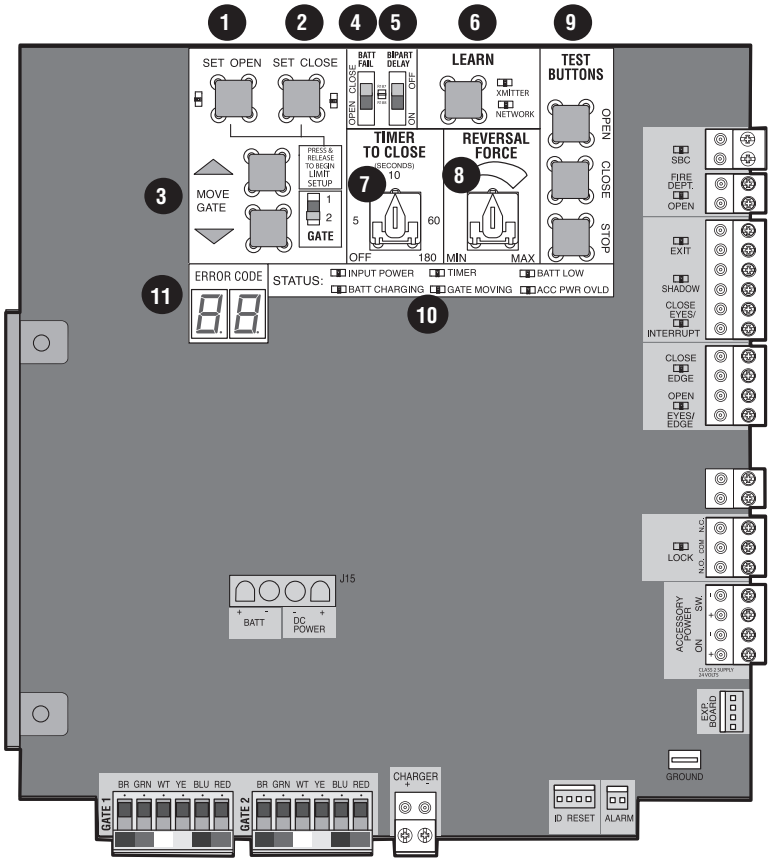

OPERATION

MANUAL RELEASE

In case of a power failure, the operator can be disengaged from the gate. With an operator, the release action may sometimes feel stiff/jerky, which is normal and has no effect on function. ***NOTE:*** *It is normal for the operator to run slow right after a disconnect or complete loss of AC/ battery power (the operator will need to run a complete open and close cycle).*

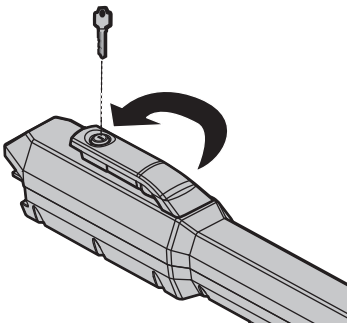

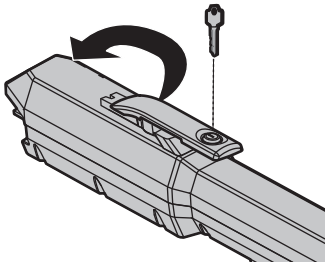

RELEASE

1. Insert the key into the lock.
2. Turn the key counter-clockwise 180°.
3. Turn the release lever counter-clockwise 180°.

Operator is in manual mode and the gate can be opened and closed manually.

ENGAGE

1. Turn the release lever clockwise 180°. This engages the motor.
2. Turn the key clockwise 180°. This locks the release lever.
3. Remove the key and store in a safe place. The operator is now engaged.

RESET BUTTON

The reset button is located on the side of the control box and serves several functions:

- Press the reset button to stop a moving gate during a normal open/ close cycle, like a stop button.
- Press the reset button once while the gate is in open position to disable the Timer-to-Close. The gate will stay in the open position. To restart the Timer-to-Close either press the reset button or activate the gate with a programmed remote control.
- Press the reset button to shut off the alarm and reset the operator.

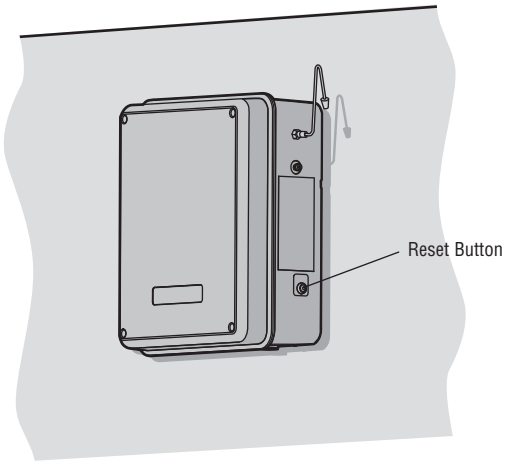

PARTY MODE

Press the reset button once while the gate is in open position to disable the Timer-to-Close. The gate will stay in the open position. To restart the Timer-to-Close either press the reset button or activate the gate with a programmed remote control.

OPERATOR ALARM

If a contact sensor detects an obstruction twice consecutively the alarm will sound (up to 5 minutes) and the operator will need to be reset.

When the inherent force of the operator (RPM/current sensor) detects the following (twice consecutively) the alarm will sound (up to 5 minutes) and the operator will need to be reset:

A. The operator arm or gate is incorrectly installed.

B. The gate does not meet specifications.

C. Gate hinges are too tight or broken and the gate is not moving freely.

D. The gate is moving and a car pushes the gate.

E. A foreign object is on the gate frame while the gate is moving.

F. The gate hits the driveway, curb or other, and gets stuck or bent in an awkward position.

Remove any obstructions. Press the reset button to shut off the alarm and reset the operator. After the operator is reset, normal functions will resume.

The operator alarm will beep 3 times with a command if the battery is low.

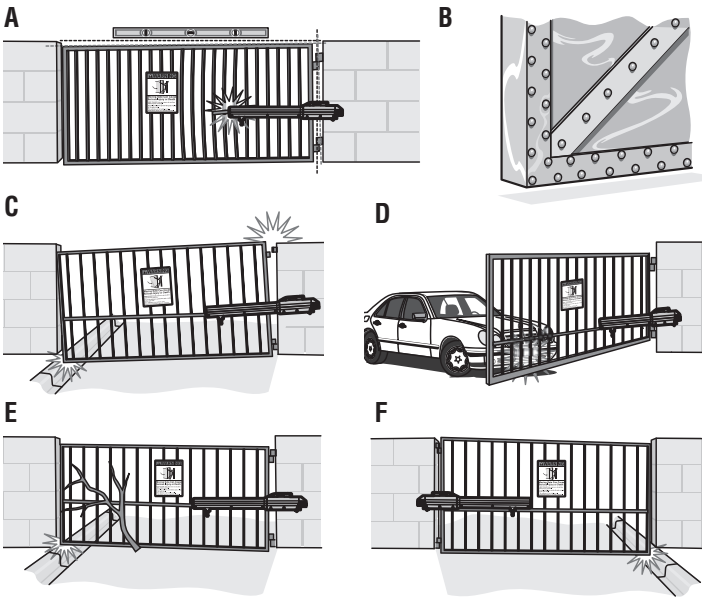

REMOTE CONTROL

SINGLE BUTTON CONTROL (SBC) FUNCTIONALITY

Once the remote control has been programmed the operator will operate as follows:

When gate is in the closed position, activation of the remote control button will open the gate. During the open cycle another activation of the remote control will stop the gate and the next activation of the remote control will close the gate.

When the gate is in the open position, activation of the remote control button will close the gate. If the remote control is activated while the gate is closing, the gate will stop and the next activation will open the gate.

ACCESSORY WIRING

EXTERNAL CONTROL DEVICES

EXIT (2 Terminals)

This input is a soft open command (maintained switch does not override external safeties and does not reset alarm condition). Used for exit probe, telephone entry, external exit loop detector, or any device that would command the gate to open.

- Opens a closing gate and holds open an open gate, if maintained, pauses Timer-to-Close at OPEN limit.

SHADOW (2 Terminals)

This input is used for external shadow loop detector when loop is positioned under the swing of the gate.

- Holds open gate at open limit
- Only active when the gate is at the OPEN limit, disregarded at all other times
- Pauses Timer-to-Close at OPEN limit

INTERRUPT (2 Terminals)

This input is used for photoelectric sensors and external interrupt loop detector when loop is on the outside of the gate.

- Holds open gate at open limit
- Stops and reverses a closing gate to open limit
- Pauses Timer-to-Close at OPEN limit, activates quick close and anti-tailgate features when enabled on the expansion board

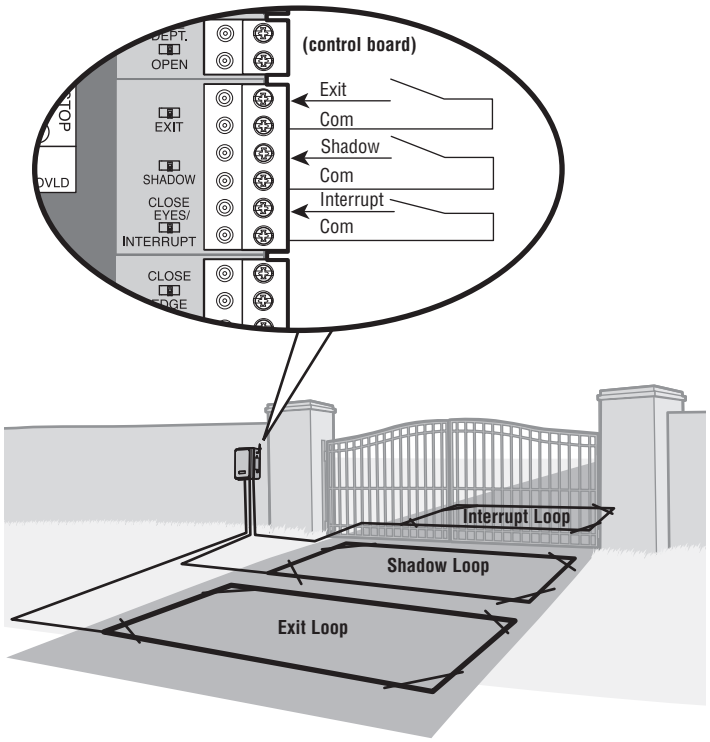

VEHICLE DETECTION DEVICES

The same accessory inputs used for vehicle detection devices are also used for entrapment protection devices (refer to step 7 of Installation). The vehicle detection devices may be monitored or non-monitored, but only ONE monitored device may be connected to each input, inclusive of entrapment protection devices. Multiple non-monitored devices can be wired to the same input. A monitored device sends a pulsed signal to the operator so the operator is aware of the device. If the operator does not receive the signal from the device indicating it is working properly, it will not run in that direction.

CLOSE EYES/INTERRUPT (2 Terminals)

The CLOSE EYES/INTERRUPT input is for photoelectric sensor vehicle detection for the close direction. When an obstruction is sensed during gate closing the gate will open to the full open position. This input will be disregarded during gate opening and resets the Timer-to-Close.

CLOSE EDGE (2 Terminals)

The CLOSE EDGE input is for edge sensor vehicle detection for the close direction. When an obstruction is sensed during gate closing the gate will reverse for 4 seconds then stop, disengaging the Timer-to-Close. This input will be disregarded during gate opening.

OPEN EYES/EDGE (2 Terminals)

The OPEN EYES/EDGE input is for photoelectric sensor or edge sensor vehicle detection for the open direction. When an obstruction is sensed during gate opening the gate will reverse for 4 seconds then stop. This input will be disregarded during gate closing.

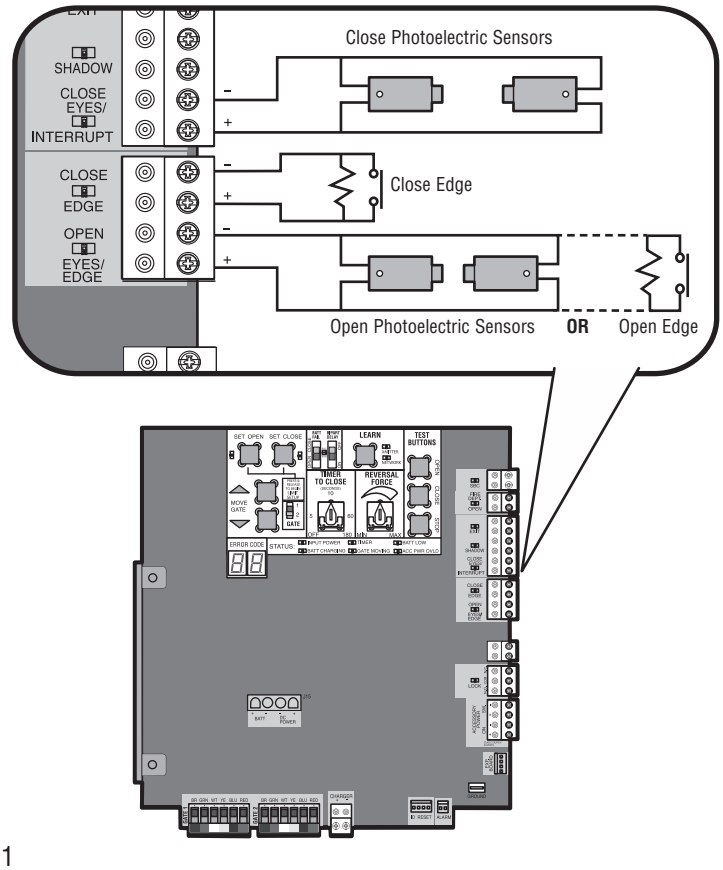

ACCESSORY WIRING

LOCKS

MAGLOCK (2 Terminals, N.C. and COM)

Relay contact output, Normally - closed (N.C.) output for maglocks.

Relay activates prior to motor activation and during motor run. Relay is off when motor is off.

NOTE: *For AC power install a Siemens S10K30 MOV (Metal Oxide Varistor) or equivalent. For DC power install a 1N4005 diode or equivalent.*

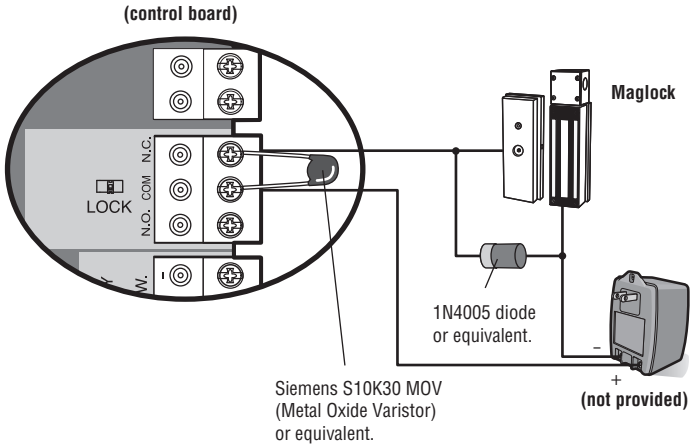

SOLENOID (2 Terminals, N.O. and COM)

Normally - open (N.O.) output for solenoid locks

Relay activates prior to motor activation and during motor run. Relay is off when motor is off.

NOTE: *For AC power install a Siemens S10K30 MOV (Metal Oxide Varistor) or equivalent. For DC power install a 1N4005 diode or equivalent.*

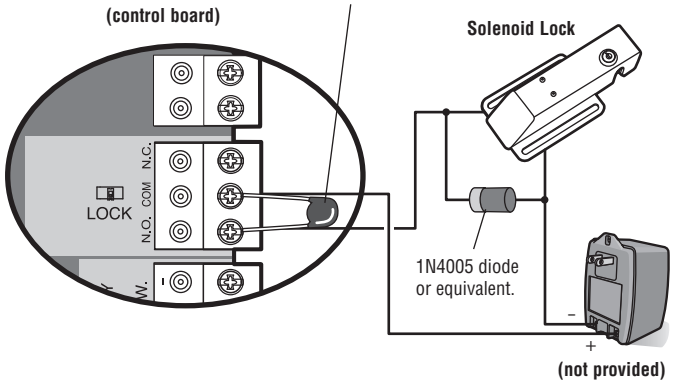

MISCELLANEOUS WIRING

SINGLE BUTTON CONTROL (SBC) (2 Terminals)

Gate command sequence - Open, Stop, Close, Stop,...

Soft open (maintained switch does not override external safeties and does not reset alarm condition).

FIRE DEPARTMENT OPEN INPUT (2 Terminals)

Acts as hard open.

Maintained input overrides (ignores) external safeties (photoelectric sensor and edge), pauses Timer-to-Close momentary input logic as single button control and safeties remain active, re-enables Timer-to-Close.

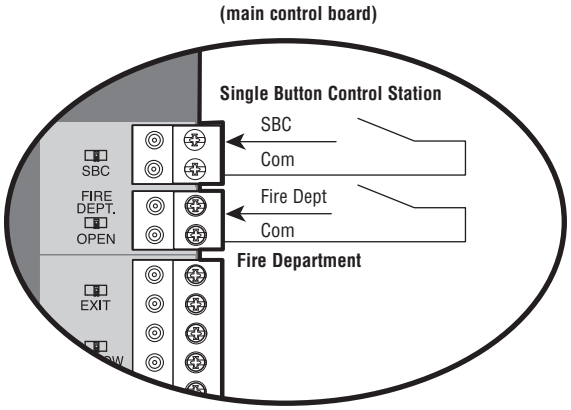

ACCESSORY POWER 24 VDC, MAX 500 mA (4 Terminals)

- SWITCHED: Switched ON with gate motion (stays on 5 seconds after motion).
- UNSWITCHED: 24 Vdc voltage out to power accessories, always ON.

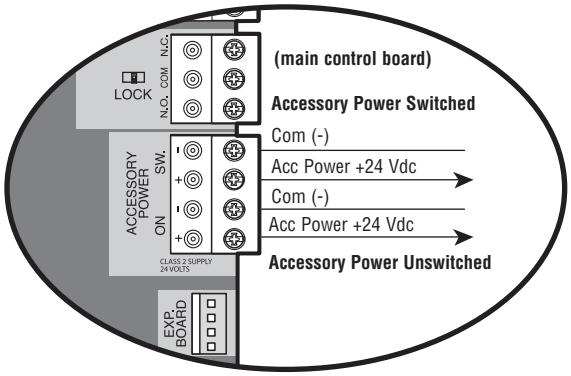

EXPANSION BOARD

CAUTION

To AVOID damaging the circuit board, relays or accessories, DO NOT connect more than 42 Vdc (32 Vac) to the AUX relay contact terminal blocks.

EXPANSION BOARD OVERVIEW

1 QUICK CLOSE Switch:

OFF: No change to the gate's normal operation.
ON: When CLOSE EYES/Interrupt loop is deactivated it causes an opening or a stopped gate to close (ignores the Timer-to-Close).

2 AC FAIL Switch:

OPEN: Loss of AC power will cause the gate to open approximately 15 seconds after AC power fail and remain OPEN until AC power is restored (enabling the Timer-to-Close).
BATT: With loss of AC power, gate will remain in present position and operator is powered from batteries.

3 EXIT LOOP FAIL Switch:

- When set to OPEN, if the EXIT plug-in loop detector detects a fault, then the gate will open and remain open until fault is cleared. When set to CLOSE, then plug-in EXIT loop detector faults are ignored (EXIT loop is faulted and inoperative).

4 ANTI-TAIL Switch:
OFF: When CLOSE EYES/Interrupt loop is activated it causes a closing gate to stop and reverse.
ON: When CLOSE EYES/Interrupt loop is activated it causes a closing gate to pause. Once the vehicle is clear the gate will continue to close.

5 AUX RELAY Switches: Set the AUX RELAY switches as needed to obtain the desired function as shown on the following page.

6 EYE/EDGE Switches: Set the EYE/EDGE switches as needed to obtain the desired OPEN or CLOSE functionality.

7 1, 2, and 3 LEDs: LEDs indicating the status of the EYE/EDGE inputs. Also used to check the firmware version of the expansion board:

1. Locate the 1, 2, and 3 LEDs on the expansion board.
2. Disconnect AC/DC power to the main control board for 15 seconds.
3. Connect power. The 1, 2, and 3 LEDs will flash in sequence until the main control board firmware revision is displayed. When the green POWER LED glows solid the LED 1 will flash the version number, then stop, then the LED 2 will flash the revision number (for example: For version 5.1 when the green POWER LED is solid the LED 1 will flash 5 times, then stop, then the LED 2 will flash once).

8 MAIN BOARD Input: Input Connection for the main board connector.

9 Input LEDs: LEDs indicating the status of the SBC, OPN, CLS, and STP inputs.

10 Loop Detector Inputs: Inputs for the Plug-In Loop Detectors (Model LOOPDETLM)

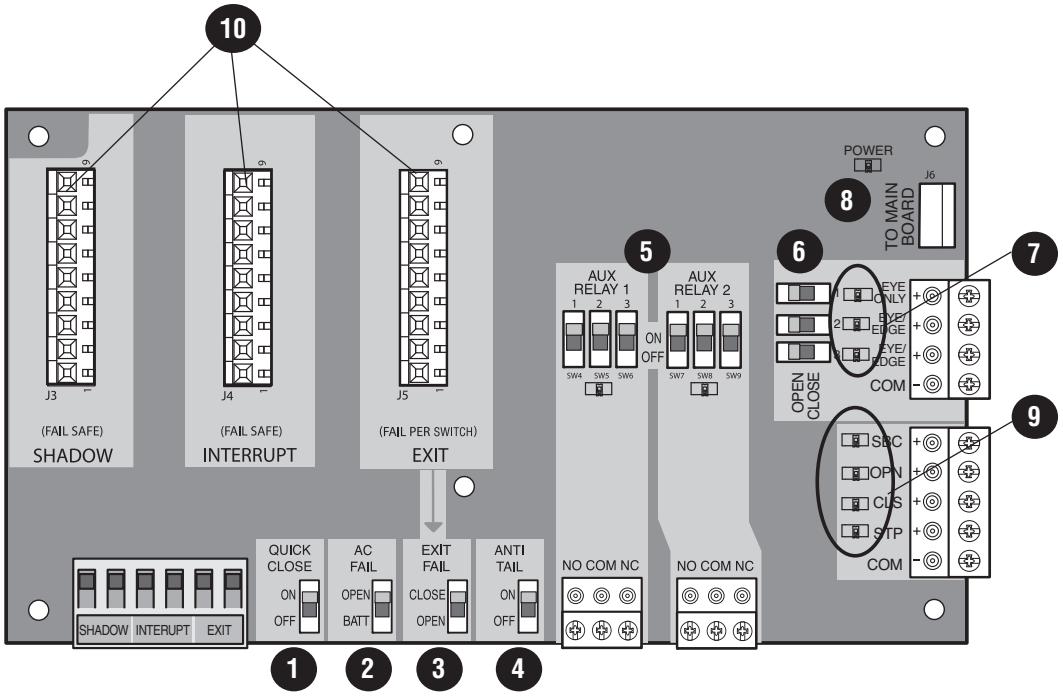

AUXILIARY RELAYS

AUX RELAY 1

Normally - Open and Normally - Closed relay contacts to control external devices, function of relay contact activation determined by AUX Relay 1 option switch settings. (For connection of Class 2, low voltage (42 Vdc [34 Vac] max 5 Amps, power sources only.)

AUX RELAY 2

Normally - Open and Normally - Closed relay contacts to control external devices, function of relay contact activation determined by AUX Relay 2 option switch settings. (For connection of Class 2, low voltage (42 Vdc [34 Vac] max 5 Amps, power sources only.)

AUX RELAY SETTING	SWITCH SETTINGS			AUX RELAY 1	AUX RELAY 2
	1	2	3		
Off (no feature selected)	OFF	OFF	OFF	Relay always off. Use this Aux Relay setting to conserve battery power.	
Open Limit Switch	OFF	OFF	ON	Energizes at open limit. Use with SAMS (Sequenced Access Management System, jointly with barrier gate).	
Close Limit Switch	OFF	ON	OFF	Energizes when not at close limit. For an additional audible or visual display, connect an external light (low voltage).	
Gate Motion	OFF	ON	ON	Energizes when motor is on (gate in motion). For an additional audible or visual display, connect an external buzzer or light (low voltage).	
Pre-Motion Delay	ON	OFF	OFF	Energizes 3 seconds before gate motion and remains energized during gate motion. The onboard alarm will sound. For an additional audible or visual display, connect an external buzzer or light (low voltage).	Energizes 3 seconds before gate motion and remains energized during gate motion. For an additional audible or visual display, connect an external buzzer or light (low voltage).
Power	ON	ON	OFF	Energizes when AC power or solar power is present. There is approximately a 10-12 second delay before relay cutoff, after AC shutdown.	Energizes when on battery power. There is approximately a 10-12 second delay before relay cutoff, after AC shutdown.
Tamper	ON	OFF	ON	Energizes if gate is manually tampered with by being pushed off of close limit. For an additional audible or visual display, connect an external buzzer or light (low voltage).	Energizes if gate is manually tampered with by being pushed off of close limit. For an additional audible or visual display, connect an external buzzer or light (low voltage).
Cycle Quantity Feedback*	ON	ON	ON	The 1, 2, and 3 LEDs will blink out the cycle count (cycle count is stored on the control board). See below.	Not used.

CYCLE COUNT

* First, note the current Aux Relay switch positions. To determine the actual cycles that the gate operator has run (in thousands), set all three Aux Relay switches to the ON setting for Aux Relay 1. The Expansion Board's 1, 2, and 3 LEDs will blink out the cycle count, with 1 LED blinking 1000's, 2 LED blinking 10,000's, 3 LED blinking 100,000's, and simultaneously all three LED's blink 1,000,000's (e.g. 1 LED blinks 3 times, 2 LED blinks 6 times, and 3 LED blinks once. Cycle count is 163,000.). Cycle count displayed is between 1,000 and 9,999,000 cycles. After servicing, set Aux Relay switches back to their appropriate positions. Cycle count cannot be reset or changed. If under 1,000 cycles the 1, 2, and 3 LEDs will turn on for 10 seconds, then turn off.

NOTE: *The expansion board will flash the cycle count 3 times then all the LEDs will turn on solid for 10 seconds then turn off.*

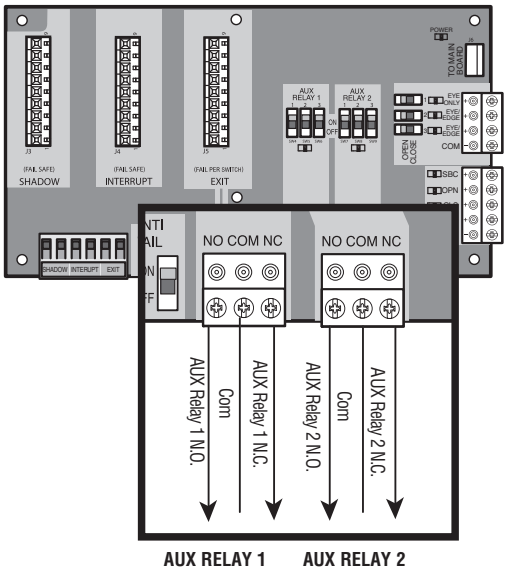

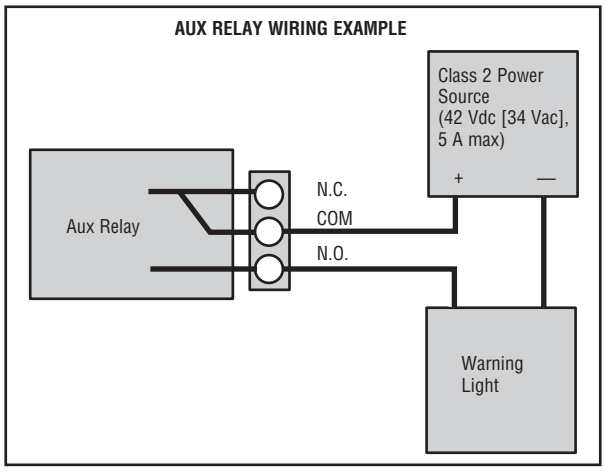

EXPANSION BOARD

WIRING ACCESSORIES TO THE EXPANSION BOARD

Refer to the chart below and the corresponding image for a description of the expansion board inputs.

A	**Entrapment Protection Device Inputs (4 terminals total), Open or Close Direction based on switch setting next to inputs**	**EYES ONLY Input:** Open or Close Direction Photoelectric Sensors **EYES/EDGE Input(s):** Open or Close Direction Photoelectric Sensors, Infra-red detector wired or Edge Sensor
B	**Single Button Control, SBC (2 terminals)**	Gate command sequence - Open, Stop, Close, Stop, ... Soft Open ,Soft Close, Soft Stop (maintained switch does not override external safeties and does not reset alarm condition)
C	**Open Input (& common) (3-Button Control Station, 4 terminals total)**	Open command - opens a closed gate. Soft open (maintained switch does not override external safeties and does not reset alarm condition) If maintained, pauses Timer-to-Close at OPEN limit. Opens a closing gate and holds open an open gate.
D	**Close Input (& common) (3-Button Control Station, 4 terminals total)**	Close command - closes an open gate. Soft close (maintained switch does not override external safeties and does not reset alarm condition)
E	**Stop Input (& common) (3-PB station, 4 terminals total)**	Stop command - stops a moving gate. Hard stop (maintained switch overrides Open and Close commands and resets alarm condition) If maintained, pauses Timer-to-Close at OPEN limit. Overrides an Open or Close command.
F	**Exit Loop Input (2 terminals)**	Loop wire connection for plug-in loop detector when loop is inside secured area near gate. Open command - opens a closed gate. Soft open (maintained switch does not override external safeties and does not reset alarm condition) If maintained, pauses Timer-to-Close at OPEN limit. Opens a closing gate and holds open an open gate.
G	**Shadow Loop Input (2 terminals)**	Loop wire connection for plug-in loop detector when loop is positioned under the gate. - Holds open gate at open limit - Disregarded during gate motion - Pauses Timer-to-Close at Open Limit
H	**Interrupt Loop Input (2 terminals)**	Loop wire connection for plug-in loop detector when loop is along the side of the gate. - Holds open gate at open limit - Stops and reverses a closing gate - Pauses Timer-to-Close at Open Limit

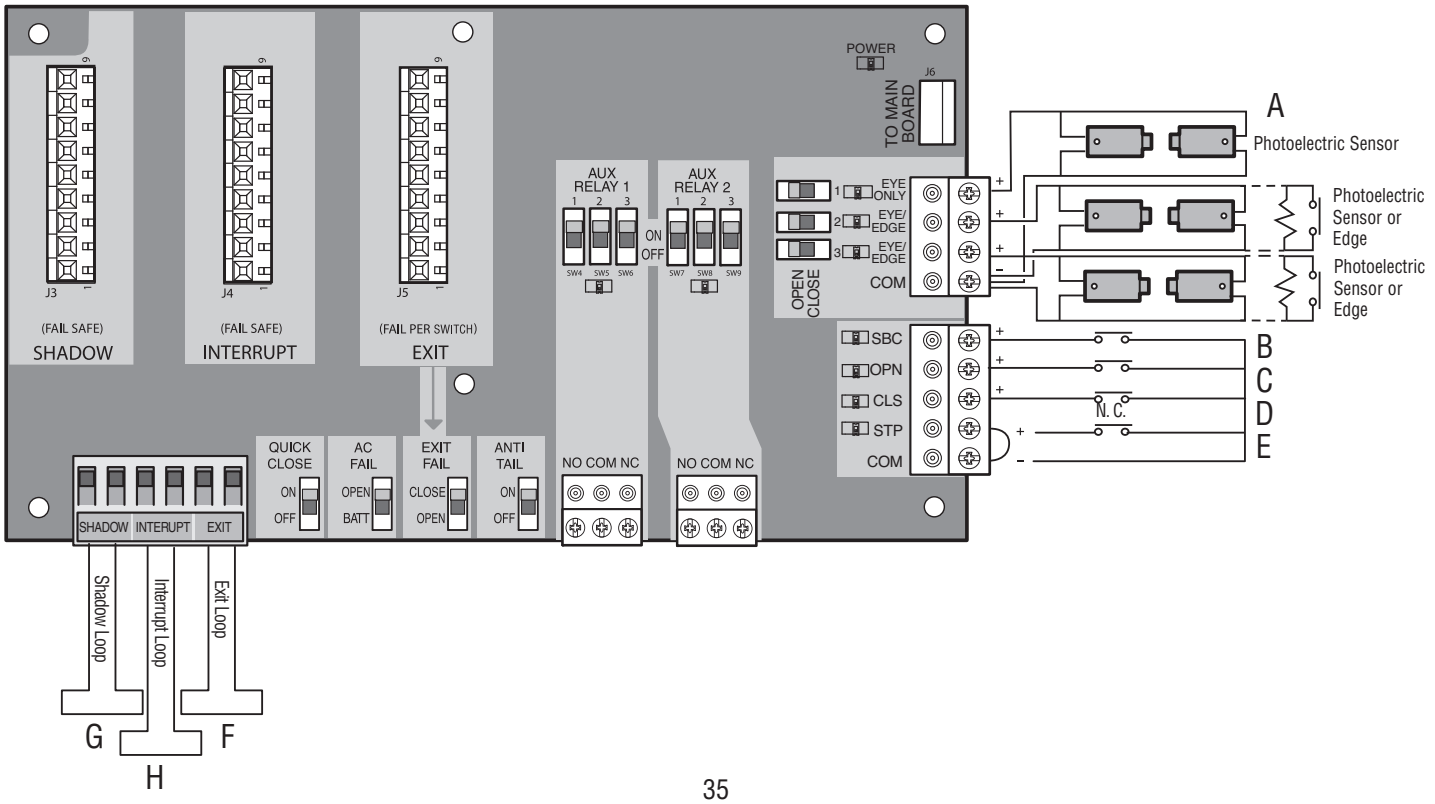

MAINTENANCE

IMPORTANT SAFETY INFORMATION

⚠⚠ WARNING

To reduce the risk of SEVERE INJURY or DEATH:

- READ AND FOLLOW ALL INSTRUCTIONS.
- ANY maintenance to the operator or in the area near the operator MUST NOT be performed until disconnecting the electrical power (AC or solar and battery) and locking-out the power via the operator power switch. Upon completion of maintenance the area MUST be cleared and secured, at that time the unit may be returned to service.
- Disconnect power at the fuse box BEFORE proceeding. Operator MUST be properly grounded and connected in accordance with national and local electrical codes. ***NOTE:*** *The operator should be on a separate fused line of adequate capacity.*
- NEVER let children operate or play with gate controls. Keep the remote control away from children.
- ALWAYS keep people and objects away from the gate. NO ONE SHOULD CROSS THE PATH OF THE MOVING GATE.
- The entrance is for vehicles ONLY. Pedestrians MUST use separate entrance.
- Test the gate operator monthly. The gate MUST reverse on contact with a rigid object or reverse when an object activates the non-contact sensors. After adjusting the force or the limit of travel, retest the gate operator. Failure to adjust and retest the gate operator properly can increase the risk of INJURY or DEATH.
- Use the manual disconnect release ONLY when the gate is not moving.
- KEEP GATES PROPERLY MAINTAINED. Read the owner's manual. Have a qualified service person make repairs to gate hardware.
- ALL maintenance MUST be performed by a LiftMaster professional.
- Activate gate ONLY when it can be seen clearly, is properly adjusted and there are no obstructions to gate travel.
- To reduce the risk of FIRE or INJURY to persons use ONLY LiftMaster part 29-NP712 for replacement batteries.
- SAVE THESE INSTRUCTIONS.

CAUTION

- ALWAYS wear protective gloves and eye protection when changing the battery or working around the battery compartment.

MAINTENANCE CHART

Disconnect all power (AC, solar, battery) to the operator before servicing. The operator's AC Power switch ONLY turns off AC power to the control board and DOES NOT turn off battery power. ALWAYS disconnect the batteries to service the operator.

DESCRIPTION	TASK	CHECK AT LEAST ONCE EVERY		
		MONTH	6 MONTHS	3 YEARS
Entrapment Protection Devices	Check and test for proper operation	X		
Warning Signs	Make sure they are present	X		
Manual Release	Check and test for proper operation		X	
Gate	Inspect for wear or damage	X		
Accessories	Check all for proper operation		X	
Electrical	Inspect all wire connections		X	
Mounting Hardware	Check for tightness		X	
Operator	Inspect for wear or damage		X	
Batteries	Replace			X

NOTES:

- *Severe or high cycle usage will require more frequent maintenance checks.*
- *It is suggested that while at the site voltage readings be taken at the operator. Using a digital voltmeter, verify that the incoming voltage to the operator is within ten percent of the operator's rating.*

BATTERIES

Batteries will degrade over time depending on temperature and usage. The operator alarm will beep 3 times with a command if the battery is low. Batteries do not perform well in extremely cold temperatures. For best performance, the batteries should be replaced every 3 years. Use only LiftMaster part 29-NP712 for replacement batteries. The standard control box comes with two 7AH batteries.

Two 33AH (A12330SGLPK) may be used in place of the 7AH batteries for a Large Metal Control Box solar installation. A battery tray (model K10-36183) and battery harness (model K94-37236) are required for 33AH applications.

The batteries contain lead and need to be disposed of properly.

TROUBLESHOOTING

⚠ WARNING

To protect against fire and electrocution:
- DISCONNECT power (AC or solar and battery) BEFORE installing or servicing operator.

For continued protection against fire:
- Replace ONLY with fuse of same type and rating.

ERROR CODES

NOTE: *When cycling or disconnecting power (ac/dc) to the control board, it is recommended that you unplug the J15 plug.*

TO VIEW THE ERROR CODES

The error codes are shown on the error code display.

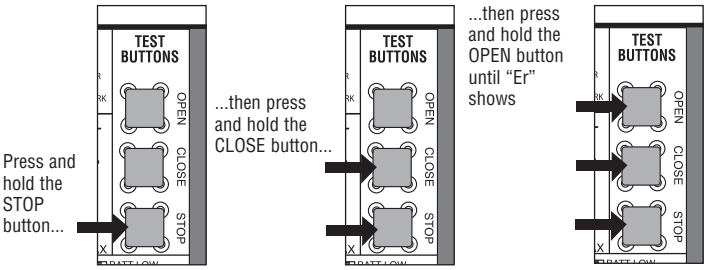

The operator will show the error sequence number followed by the error code number:

ERROR SEQUENCE NUMBER

The first number shown is the most recent error (example: "01" shown below). The display will show the sequence of errors that occurred starting with "01" and going up to error "20".

A SECOND LATER....

ERROR CODE NUMBER

The second number shown after the error sequence number is the error code itself (31-99, example" "31" shown below). Refer to the chart on the following page for an explanation of each error code.

TO SCROLL THROUGH THE SAVED ERROR CODES

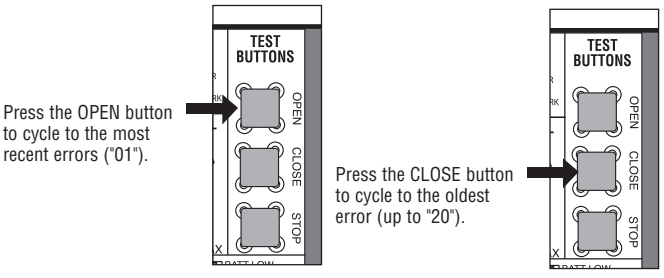

The operator will only keep track of up to 20 errors, then will start saving over the oldest errors as new errors occur.

OPEN, CLOSE, & STOP BUTTONS

ERROR CODE DISPLAY

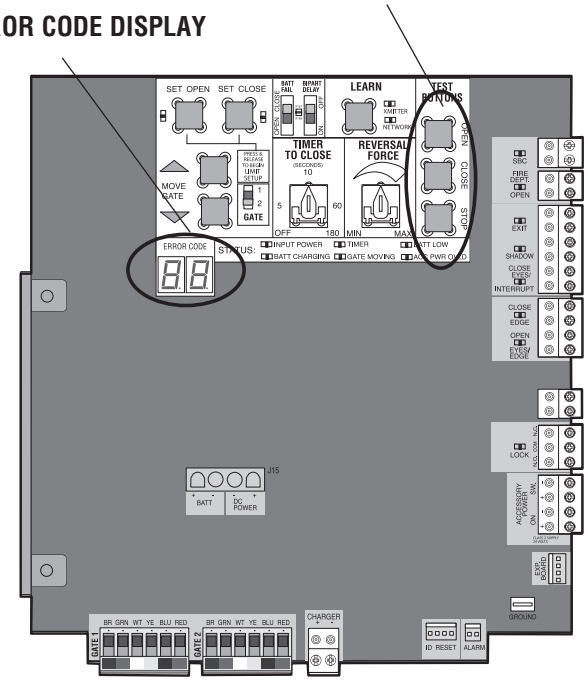

TO EXIT ERROR CODE DISPLAY

Press and release the STOP button to exit. The error code display will also time out after two minutes of inactivity.

TO RESET THE ERROR CODE HISTORY

1. Press and hold the STOP button for six seconds. The display will show "Er" then "CL" alternately for six seconds.
2. Release the STOP button. The error history has now been reset and the display will show "- -" until a new error occurs.
3. Press and release the STOP button to exit.

ERROR CODES continued...

Some errors are saved in the error code history and some are not. If an error is not saved it will briefly appear on the error code display as it occurs, then disappear.

Code Error	Meaning	Solution	Saved
31	Control board has experienced an internal failure.	Disconnect all power, wait 15 seconds, then reconnect power (reboot). If issue continues, replace control board.	NO
32	Linear Drive Disengaged (Arm 1)	Disengage then re-engage arm, check wiring and connections.	YES
33	Linear Drive Disengaged (Arm 2)	Disengage then re-engage arm, check wiring and connections.	YES
34	Absolute Position Encoder Error, not getting position information from encoder	Check the operator cable connections, then reprogram the limits.	YES
35	Max-Run-Time Exceeded Error	Check for an obstruction, then reprogram the limits.	YES
36	Product ID Error	Was the control board just replaced? If so, erase limits, enter limit setup mode and set limits. If not, disconnect all power, wait 15 seconds, then reconnect power before changing product ID harness.	YES
37	Product ID Failure	Unplug product ID harness then plug back in. Disconnect all power, wait 15 seconds, then reconnect power before replacing product ID harness.	YES
38	Hard Stop Limit (Arm 1)	Limit may be set too tightly against a non-resilient hard stop (re-adjust limit). Operator may be at end of travel (re-adjust mounting).	NO
39	Hard Stop Limit (Arm 2)	Limit may be set too tightly against a non-resilient hard stop (re-adjust limit). Operator may be at end of travel (re-adjust mounting).	NO
40	Battery overvoltage	Too much voltage on the battery. Check harness. Make sure you do NOT have a 24V battery on a 12V system.	YES
41	Battery overcurrent	Possible short of the battery charge harness. Check harness. Make sure you do NOT have a 12V battery on a 24V system.	YES
42	No battery at boot up	Check battery connections and installation. Replace batteries if depleted to less than 20V on a 24V system. Make sure you do NOT have a single 12V battery on a 24V system.	YES
43	Loop Error - Failure or missing exit loop (SHORT or OPEN - LiftMaster Plug-in Loop Detector only)	Check loop wiring throughout connection. May be a short in the loop, or an open connection in the loop.	YES
44	Loop Error - Failure or missing shadow loop (SHORT or OPEN - LiftMaster Plug-in Loop Detector only)	Check loop wiring throughout connection. May be a short in the loop, or an open connection in the loop.	YES
45	Loop Error - Failure or missing interrupt loop (SHORT or OPEN - LiftMaster Plug-in Loop Detector only)	Check loop wiring throughout connection. May be a short in the loop, or an open connection in the loop.	YES
46	Wireless edge battery low	Replace batteries in wireless edge.	YES
51	Pass-point not detected (Arm 1)	Check yellow pass-point wiring. If limits are not accurate, reprogram. Rarely, may be standard operation.	NO
52	Pass-point not detected (Arm 2)	Check yellow pass-point wiring. If limits are not accurate, reprogram. Rarely, may be standard operation.	NO
53	Brownout occurred	AC/DC board supply dipped below allowable level. Review power supply and wiring. If rebooting, ensure enough time for discharge of power to force a fresh boot.	YES
54	Wireless Second Operator Communication Error	Check the second operator for power. If OFF, restore power and try to run the system. If powered, deactivate the wireless feature and then re-learn the second operator.	YES
60	Minimum number of monitored entrapment protection devices (one) not installed.	Review monitored entrapment protection device connections.	NO
61	CLOSE EYE/INTERRUPT held more than 3 minutes (main board)	Check CLOSE EYE/INTERRUPT input on main board; check for alignment or obstruction.	YES
62	CLOSE EDGE held more than 3 minutes (main board)	Check CLOSE EDGE input on main board; check for alignment or obstruction.	YES
63	OPEN EYE/EDGE held more than 3 minutes (main board)	Check OPEN EYE/EDGE input on main board; check for alignment or obstruction.	YES
64	CLOSE EYE/INTERRUPT held more than 3 minutes (expansion board)	Check wired input on expansion board; check for alignment or obstruction.	YES
65	CLOSE EYE/EDGE held more than 3 minutes (expansion board)	Check wired input on expansion board; check for alignment or obstruction.	YES

ERROR CODES continued...

Some errors are saved in the error code history and some are not. If an error is not saved it will briefly appear on the error code display as it occurs, then disappear.

Code Error	Meaning	Solution	Saved
66	OPEN EYE/EDGE held more than 3 minutes (expansion board)	Check wired input on expansion board; check for alignment or obstruction.	YES
67	Wireless edge triggered more than 3 minutes	Check wired input for wiring issue or obstruction.	YES
68	Wireless edge loss of monitoring	Check wireless edge inputs.	YES
69	Wireless edge triggered	IF an obstruction occurred, no action required. If an obstruction did NOT occur, check inputs and wiring.	NO
70	CLOSE EYE/INTERRUPT triggered, causing reversal, preventing close, or resetting TTC (main board)	IF an obstruction occurred, no action required. If an obstruction did NOT occur, check alignment, inputs, and wiring.	NO
71	CLOSE EDGE triggered, causing reversal, preventing close, or cancelling TTC (main board)	IF an obstruction occurred, no action required. If an obstruction did NOT occur, check alignment, inputs, and wiring.	NO
72	OPEN EYE/EDGE triggered, causing reversal or preventing opening (main board)	IF an obstruction occurred, no action required. If an obstruction did NOT occur, check alignment, inputs, and wiring.	NO
73	CLOSE EYE/INTERRUPT triggered, causing reversal, preventing close, or resetting TTC (expansion board)	IF an obstruction occurred, no action required. If an obstruction did NOT occur, check alignment, inputs, and wiring.	NO
74	CLOSE EYE/EDGE triggered, causing reversal and preventing close or cancelling TTC (expansion board)	IF an obstruction occurred, no action required. If an obstruction did NOT occur, check alignment, inputs, and wiring.	NO
75	OPEN EYE/EDGE triggered, causing reversal or preventing opening (expansion board)	IF an obstruction occurred, no action required. If an obstruction did NOT occur, check alignment, inputs, and wiring.	NO
80	Close input (EYE/EDGE) communication fault (secondary control box)	Check the connections between the main board and the secondary operator.	YES
81	Open input (EYE/EDGE) communication fault (secondary control box)	Check the connections between the main board and the secondary operator.	YES
82	Close input (EYE/EDGE) communication fault (expansion board)	Check the connections between the main board and the expansion board.	YES
83	Open input (EYE/EDGE) communication fault (expansion board)	Check the connections between the main board and the expansion board.	YES
91	Force reversal (Arm 1)	Check for obstruction. If no obstruction, check that the operator arm is engaged and free to move. Refer to Limit and Force Adjustment section, and Obstruction Test.	YES
92	Force reversal (Arm 2)	Check for obstruction. If no obstruction, check that the operator arm is engaged and free to move. Refer to Limit and Force Adjustment section, and Obstruction Test.	YES
93	RPM / STALL Reversal (Arm 1)	Check for obstruction. If no obstruction, check the operator cable wiring and that the operator arm is engaged and free to move. Replace the operator arm if necessary.	YES
94	RPM / STALL Reversal (Arm 2)	Check for obstruction. If no obstruction, check the operator cable wiring and that the operator arm is engaged and free to move. Replace the operator arm if necessary.	YES
99	Normal Operation	No action required	YES

TROUBLESHOOTING

CONTROL BOARD LEDS

STATUS LEDS		
INPUT POWER	OFF	OFF state
	ON	AC charger or Solar power available
BATT CHARGING	OFF	Not charging
	ON	Three stage battery charging
TIMER	OFF	The timer is disabled
	ON	The timer is enabled
	MEDIUM BLINK (1 blink per second)	The timer is running
	FAST BLINK (2 blinks per second)	The timer is paused
	FASTEST BLINK (8 blinks per second)	The timer is cancelled
GATE MOVING	OFF	The gate is stopped
	ON	The gate is opening or closing
	MEDIUM BLINK (1 blink per second)	Operator is in E1 (single entrapment)
	FASTEST BLINK (8 blinks per second)	The operator is in E2 (double entrapment)
BATT LOW	OFF	No battery error
	ON	Battery low
	BLINK (1 blink per second)	Battery critically low
ACC PWR OVLD	OFF	OFF state
	ON	Accessory overload protector opened

INPUT LEDS		
SBC INPUT	OFF	Input inactive
	ON	Input active
	BLINK	Input active on other operator
FIRE DEPT INPUT	OFF	Input inactive
	ON	Input active
	BLINK	Input active on other operator
EXIT	OFF	Input inactive
	ON	Input active
	BLINK	Input active on other operator
SHADOW	OFF	Input inactive
	ON	Input active
	BLINK	Input active on other operator
CLOSE EYES/ INTERRUPT	OFF	Input inactive
	ON	Input active
	BLINK	Input active on other operator
CLOSE EDGE	OFF	Input inactive
	ON	Input active
	BLINK	Input active on other operator
OPEN EYES/ EDGE	OFF	Input inactive
	ON	Input active
	BLINK	Input active on other operator
LOCK	OFF	Input inactive
	ON	Input active
	BLINK	Input active on other operator

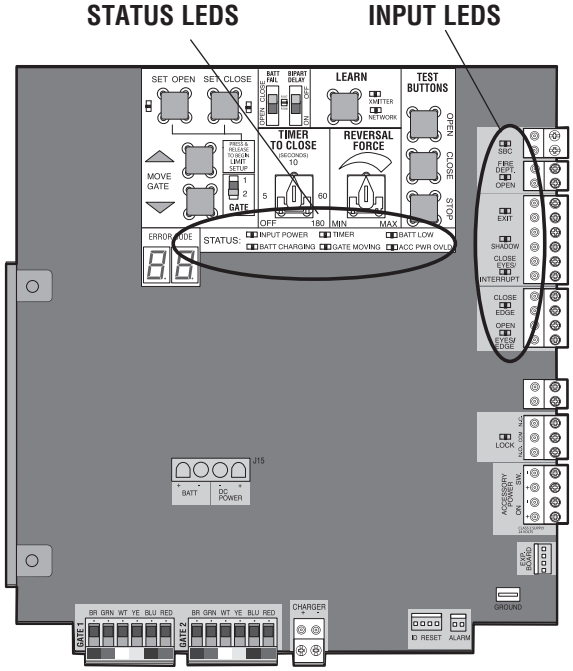

TROUBLESHOOTING

TROUBLESHOOTING CHART

SYMPTOM	POSSIBLE CAUSES	SOLUTIONS
Operator does not run and error code display not on.	a) No power to control board b) Open fuse c) If on battery power only, low or dead batteries d) Defective control board	a) Check AC and battery power b) Check fuses c) Charge batteries by AC or solar power or replace batteries d) Replace defective control board
Control board powers up, but motor does not run.	a) Reset button is stuck b) Stop button active or jumper not in place for stop circuit c) If on battery power only, low or dead batteries d) Open or Close input active e) Entrapment Protection Device active f) Vehicle loop detector or probe active g) Defective control board	a) Check Reset button b) Check Stop button is not “stuck on”, or verify that the stop button is a normally closed circuit, or put a jumper on the stop circuit. c) Charges batteries by AC or solar power or replace batteries d) Check all Open and Close inputs for a “stuck on” input e) Check all Entrapment Protection Device inputs for a “stuck on” sensor f) Check all vehicle detector inputs for a “stuck on” detector g) Replace defective control board
Arm moves, but cannot set correct limits.	a) Arm does not extend or retract enough during travel b) Arm is interfering with mounting bracket c) Gate is too difficult to move	a) Disengage the arm and ensure arm moves freely b) Examine the hinge point where the arm mounts to the gate post. Make sure that the arm housing does not hit or interfere with the gate post or mounting bracket. Correct as necessary. c) Disconnect arm from gate and move gate manually. Gate must move easily and freely through its entire range, limit-to-limit. Repair gate as needed.
Gate does not fully open or fully close when setting limits.	a) Arm does not extend or retract enough during travel b) Arm is interfering with mounting bracket c) Gate is too difficult to move	a) Disengage the arm and ensure arm moves freely b) Examine the hinge point where the arm mounts to the gate post. Make sure that the arm housing does not hit or interfere with the gate post or mounting bracket. Correct as necessary. c) Remove arm from gate and move gate manually. Gate must move easily and freely through its entire range, limit-to-limit. Repair gate as needed.
Operator does not respond to a wired control/command (example: Open, Close, SBC, etc.)	a) Check Open and Close command input LEDs b) Stop button is active c) Reset button is stuck d) If on battery power only, low or dead batteries e) Entrapment Protection Device active f) Vehicle loop detector or vehicle probe active	a) Check all Open and Close inputs for a “stuck on” input b) Check Stop button is not “stuck on” c) Check Reset button d) Charges batteries by AC or solar power or replace batteries e) Check all Entrapment Protection Device inputs for a “stuck on” sensor f) Check all vehicle detector inputs for a “stuck on” detector
Operator does not respond to a wireless control or transmitter	a) Check XMITTER LED when wireless control is active b) Stop button is active c) Reset button is stuck d) Poor radio reception	a) Activate wireless control and check XMITTER LED is on. Re-learn wireless control/transmitter to control board. Replace wireless control as needed. b) Check Stop button is not “stuck on” c) Check Reset button d) Check if similar wired control operates correctly. Check if wireless controls works properly when within a few feet of operator. Check operator’s antenna and antenna wire. Check other wireless controls or devices.
Gate stops during travel and reverses immediately.	a) Control (Open, Close) becoming active b) Vehicle loop detector active c) Low battery voltage	a) Check all Open and Close inputs for an active input b) Check all vehicle detector inputs for an active detector c) Battery voltage must be 23.0 Vdc or higher. Charge batteries by AC or solar power or replace batteries
Gate opens, but will not close with transmitter or Timer-to-Close.	a) Open control active b) Vehicle loop detector active c) Loss of AC power with AC FAIL set to OPEN d) Low battery with LOW BATT set to OPEN e Fire Dept input active f) Timer-to-Close not set g) Close Entrapment Protection Device active	a) Check all Open inputs for an active input b) Check all vehicle detector inputs for an active detector c) Check AC power and AC Fail option setting d) Check if AC power is available. If no AC power, then running on batteries and battery voltage must be 23.0 Vdc or higher. Charge batteries by AC or solar power or replace batteries. e) Check Fire Dept input f) Check Timer-to-Close (TTC) setting g) Check all Entrapment Protection Device inputs for an active sensor

TROUBLESHOOTING CHART continued...

SYMPTOM	POSSIBLE CAUSES	SOLUTIONS
Gate closes, but will not open.	a) Vehicle loop detector active b) Low battery with LOW BATT option set to CLOSE	a) Check all vehicle detector inputs for an active detector b) Check if AC power is available. If no AC power, then running on batteries and battery voltage must be 23.0 Vdc or higher. Charge batteries by AC or solar power or replace batteries
Exit loop activation does not cause gate to open.	a) Exit vehicle detector setup incorrectly b) Defective Exit loop detector c) Low battery with LOW BATT option set to CLOSE	a) Review Exit loop detector settings. Adjust settings as needed. b) Replace defective Exit loop detector. c) Check if AC power is available. If no AC power, then running on batteries and battery voltage must be 23.0 Vdc or higher. Charge batteries by AC or solar power or replace batteries.
Interrupt loop does not cause gate to stop and reverse.	a) Vehicle detector setup incorrectly b) Defective vehicle loop detector	a) Review Interrupt loop detector settings. Adjust settings as needed. b) Replace defective Interrupt loop detector.
Shadow loop does not keep gate at open limit.	a) Vehicle detector setup incorrectly b) Defective vehicle loop detector	a) Review Shadow loop detector settings. Adjust settings as needed. b) Replace defective Shadow loop detector.
Obstruction in gate's path does not cause gate to stop and reverse	a) Force adjustment needed	a) Refer to the Adjustment section to conduct the obstruction test and perform the proper force adjustment that is needed.
Photoelectric sensor does not stop or reverse gate.	a) Incorrect photoelectric sensor wiring b) Defective photoelectric sensor	a) Check photoelectric sensor wiring. Retest that obstructing photoelectric sensor causes moving gate to stop, and may reverse direction. b) Replace defective photoelectric sensor. Retest that obstructing photoelectric sensor causes moving gate to stop, and may reverse direction.
Edge Sensor does not stop or reverse gate.	a) Incorrect edge sensor wiring b) Defective edge sensor	a) Check edge sensor wiring. Retest that activating edge sensor causes moving gate to stop and reverse direction. b) Replace defective edge sensor. Retest that activating edge sensor causes moving gate to stop and reverse direction.
Alarm sounds for 5 minutes or alarm sounds with a command.	a) Double entrapment occurred (two obstructions within a single activation)	a) Check for cause of entrapment (obstruction) detection and correct. Press the reset button to shut off alarm and reset the operator.
Alarm beeps three times with a command.	a) Low battery	a) Check if AC power is available. If no AC power, then running on batteries and battery voltage must be 23.0 Vdc or higher. Charge batteries by AC or solar power or replace batteries
On dual-gate system, incorrect gate opens first or closes first.	a) Incorrect Bipart switch setting	a) Change setting of both operator's Bipart switch settings. One operator should have Bipart switch ON (operator that opens second) and the other operator should have Bipart switch OFF (operator that opens first)
Alarm beeps when running.	a) Expansion board setting b) Constant pressure to open or close is given	a) Pre-warning is set to "ON" b) Constant pressure to open or closed is given
Expansion board function not controlling gate.	a) Defective main board to expansion board wiring b) Incorrect input wiring to expansion board c) Defective expansion board or defective main board	a) Check main board to expansion board wiring. If required, replace wire cable. b) Check wiring to all inputs on expansion board. c) Replace defective expansion board or defective main board

TROUBLESHOOTING CHART continued...

SYMPTOM	POSSIBLE CAUSES	SOLUTIONS
Maglock not working correctly.	a) Maglock wired incorrectly	a) Check that Maglock is wired to N.C. and COM terminals. Check that Maglock has power (do not power maglock from control board accessory power terminals). If shorting lock's NO and COM wires does not activate Maglock, then replace Maglock or Maglock wiring (refer to Wiring Diagrams).
Solenoid lock not working correctly.	a) Solenoid wired incorrectly	a) Check that Solenoid is wired to N.O. and COM terminals. Check that Solenoid has power (do not power solenoid from control board accessory power terminals). If shorting lock's NC and COM wires does not activate Solenoid, then replace Solenoid lock or Solenoid wiring (refer to Wiring Diagrams).
Switched (SW) Accessory power remaining on.	a) In limit setup mode	a) Learn the limits
Accessories connected to Switch (SW) Accessory power not working correctly, turning off, or resetting.	a) Normal behavior	a) Move accessory to accessory power "ON"
Accessories connected to Accessory power not working correctly, turning off, or resetting.	a) Accessory power protector active b) Defective control board	a) Disconnect all accessory powered devices and measure accessory power voltage (should be 23 – 30 Vdc). If voltage is correct, connect accessories one at a time, measuring accessory voltage after every new connection. b) Replace defective control board
Quick Close not working correctly.	a) Quick Close setting incorrect b) Interrupt loop detector c) Defective Expansion board	a) Check that Quick Close setting is ON b) Check operation of Interrupt Loop detector c) Replace defective Expansion board
Anti-Tailgating not working correctly.	a) Anti-Tail setting incorrect b) Interrupt loop detector c) Defective Expansion board	a) Check that Anti-Tail setting is ON b) Check operation of Interrupt Loop detector c) Replace defective Expansion board
AUX Relay not working correctly.	a) AUX Relay setting incorrect b) AUX Relay wiring incorrect c) Defective Expansion board	a) Check AUX Relay switches settings b) Check that wiring is connected to either N.O. and COM or to N.C. and COM. c) Set AUX Relay to another setting and test. Replace defective expansion board.
Solar operator not getting enough cycles per day	a) Insufficient panel wattage b) Excessive accessory power draw c) Old batteries d) Solar panels are not getting enough sunlight	a) Add more solar panels b) Reduce the accessory power draw by using LiftMaster low power accessories c) Replace batteries d) Relocate the solar panels away from obstructions (trees, buildings, etc.)
Solar operator, insufficient standby time	a) Insufficient panel wattage b) Excessive accessory power draw c) Battery capacity too low	a) Add more solar panels b) Reduce the accessory power draw by using LiftMaster low power accessories c) Use batteries with higher amp hour (AH) rating

APPENDIX

INSTALLATION TYPES

PULL-TO-OPEN

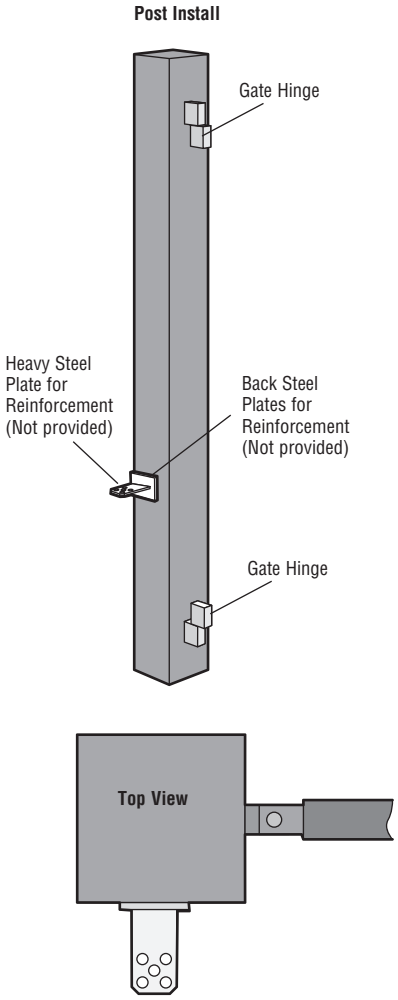

PUSH-TO-OPEN

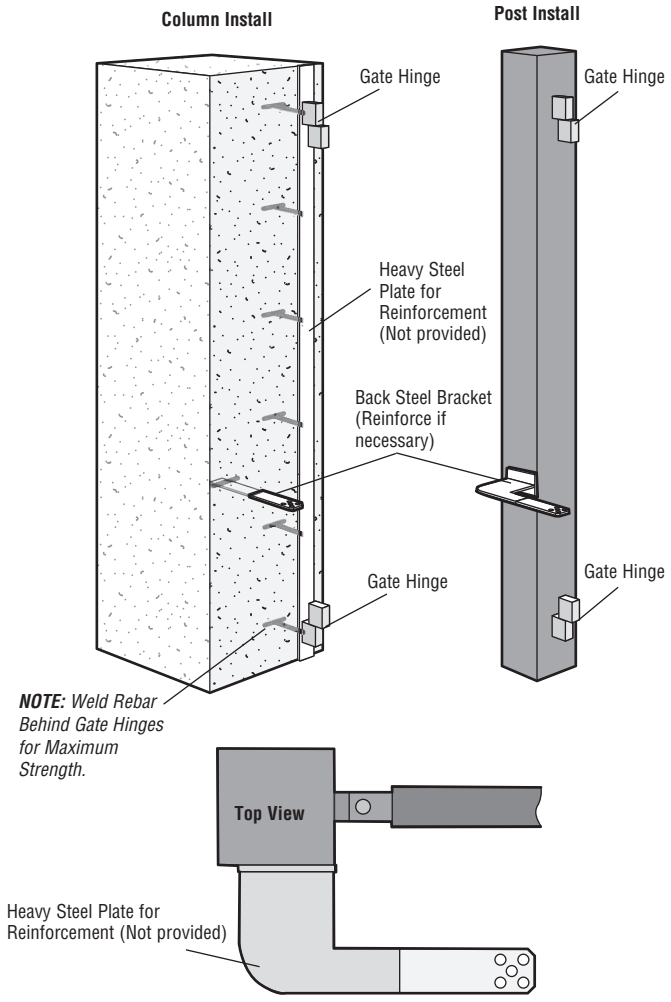

STEP 1

POSITION THE BRACKETS

If your application is Push-to-Open, refer to the illustrations below for the correct dimensions for step 1.

PUSH-TO-OPEN APPLICATION
(Top View)

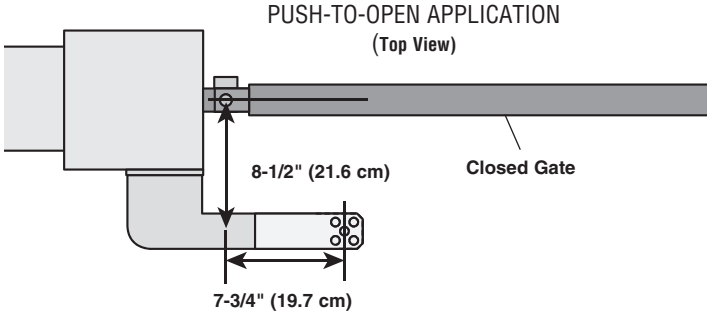

PUSH-TO-OPEN APPLICATION
(Top View)

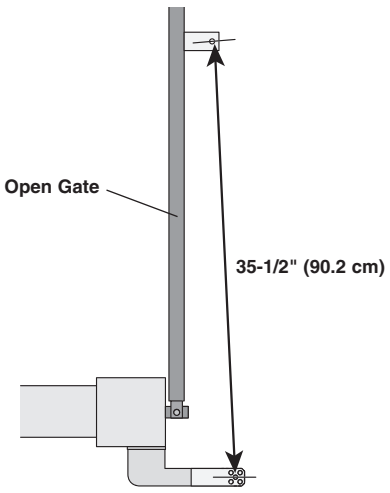

STEP 8

SOLAR PANEL(S)

SOLAR PANELS ARE NOT PROVIDED. SEE ACCESSORIES.

33AH Battery Requirements:

- Large Metal Control Box for Solar Applications (Model XLSOLARCONTDC)
- A minimum of two 10W solar panels in series (Model SOLPNL10W12V)
- A maximum of six 10W solar panels (Model SOLPNL10W12V). Configuration of three sets of two 10W paralleled panels put in series.
- Two 33AH Batteries (Model A12330SGLPK)
- Solar Battery Harness (Model K94-37236)
- Battery Tray (Model K10-36183)

7AH Battery Requirements:

- Standard Control Box for Solar Applications (Model LA500CONTDC)
- A minimum of two 10W solar panels in series (Model SOLPNL10W12V)
- A maximum of six 10W solar panels (Model SOLPNL10W12V). Configuration of three sets of two 10W paralleled panels put in series.
- Two 7AH batteries (29-NP712)
- Solar Battery Harness (Model K94-37236)

Disconnect the expansion board if it is not in use to improve performance**.** We recommend LiftMaster low power draw accessories to minimize power draw, refer to accessory page. Use the tables below to see performance trade-offs. ***NOTE:*** *Input solar power is 24 Vdc at 60 watts maximum.*

The solar panel(s) must be located in an open area clear of obstructions and shading for the entire day. The gate operator is not supported in northern climates where temperatures reach below -4˚F. This is due to cold weather and a reduced number of hours of sunlight during the winter months. Cycle rate may vary from solar chart for areas that reach below 32˚F. Solar panels should be cleaned on a regular basis for best performance to ensure proper operation.

SOLAR USAGE GUIDE

The LA500DC has best in class solar performance due to highly efficient electronics that draw very little power while the gate is not in use (standby).

Typical System Standby Battery Current Consumption (mA)	System Configuration
2.7 mA	Main control board draw with no remote controls programmed
+1 mA	Low band radio receiver active (one or more wireless transmitters learned)
+2.4 mA	High band radio active (MyQ device programmed)
+11.1 mA	Expansion board
+3.8 mA	Per loop detector (up to 3 loop detectors can be plugged into the expansion board)

This low current draw drastically increases the number of days the operator can remain in standby. To determine your system's performance, reference the above table and determine how many milliamps (mA) your system will draw from the batteries.

EXAMPLE 1: *A system with only a main control board and one or more hand held remote controls programmed will draw 3.7 mA from the batteries while the system is in standby (2.7 mA + 1 mA = 3.7 mA).*

EXAMPLE 2: *A system with only a main control board, one or more hand held remote controls programmed, and 20 mA of external accessories connected to the main control board's accessory power output will draw 23.7 mA from the batteries while the system is in standby (2.7 mA + 1 mA + 20 mA = 23.7 mA).*

EXAMPLE 3: *A system with a main control board, expansion board, two loop detectors, and one or more hand held remote controls programmed will draw 18 mA from the batteries while the system is in standby (2.7 mA + 11.1 mA + 3.8 mA * 2 +1 = 18.6 mA).*

Operator performance with no sun or loss of AC power							
BATTERY CURRENT DRAW (mA)	SYSTEM CONFIGURATION	DAYS OF STANDBY		SINGLE GATE CYCLES ON BATTERY		DUAL GATE CYCLES ON BATTERY	
		7AH batteries	33AH batteries	7AH batteries	33AH batteries	7AH batteries	33AH batteries
2.7	main control board only	133	180	500	2781	234	1327
3.7	remote controls programmed	97	180	500	2781	234	1327
6.1	remote controls and MyQ programmed	59	180	500	2781	234	1327
14.8	remote controls and expansion board	24	105	500	2780	234	1327
18.6	remote controls, expansion board, and one loop detector	19	84	500	2780	234	1326
26.2	remote controls, expansion board, and three loop detectors	14	60	500	2779	233	1326
30		12	52	500	2779	233	1326
40		9	39	500	2778	233	1325
60		6	26	500	2776	233	1324
100		4	16	500	2772	232	1323
200		2	8	500	2761	229	1318
300		1	5	500	2751	227	1313
500		1	3	500	2731	222	1304

All numbers are estimates. Actual results may vary.

STEP 8 continued...

SOLAR PANEL(S)

SOLAR USAGE GUIDE

SOLAR ZONES

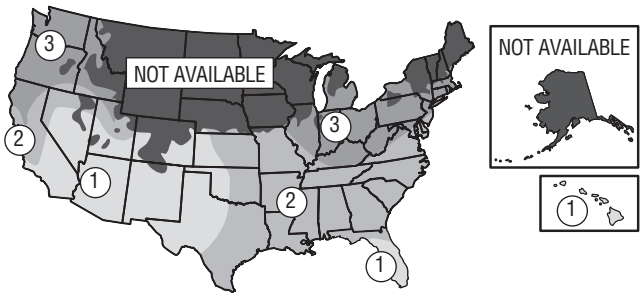

SOLAR GATE CYCLES PER DAY (SINGLE GATE)

	BATTERY CURRENT DRAW (mA)	ZONE 1 (6 Hrs sunlight/day)		ZONE 2 (4 Hrs Sunlight/day)		ZONE 3 (2 Hrs Sunlight/day)	
		7AH batteries	33AH batteries	7AH batteries	33AH batteries	7AH batteries	33AH batteries
10W SOLAR PANEL	5	52	56	30	33	11	12
	15	43	47	23	25	n/a	n/a
	20	39	43	19	21	n/a	n/a
	40	24	27	n/a	n/a	n/a	n/a
	60	10	13	n/a	n/a	n/a	n/a
20W SOLAR PANEL	5	113	132	67	79	27	32
	15	103	122	59	70	20	24
	20	98	117	54	65	16	21
	50	71	88	30	40	n/a	n/a
	100	29	45	n/a	n/a	n/a	n/a
40W SOLAR PANEL	5	212	299	128	181	53	75
	15	201	288	118	170	44	66
	20	196	282	113	165	40	62
	100	114	194	41	86	n/a	n/a
	200	27	93	n/a	n/a	n/a	n/a
60W SOLAR PANEL	5	263	300	159	286	66	120
	15	252	300	149	275	57	111
	20	246	300	143	269	53	106
	100	160	300	67	181	n/a	35
	250	24	187	n/a	39	n/a	n/a

SOLAR GATE CYCLES PER DAY (DUAL GATE)

	BATTERY CURRENT DRAW (mA)	ZONE 1 (6 Hrs sunlight/day)		ZONE 2 (4 Hrs Sunlight/day)		ZONE 3 (2 Hrs Sunlight/day)	
		7AH batteries	33AH batteries	7AH batteries	33AH batteries	7AH batteries	33AH batteries
10W SOLAR PANEL	5	22	24	13	14	n/a	n/a
	15	19	20	n/a	11	n/a	n/a
	20	17	19	n/a	n/a	n/a	n/a
	40	10	12	n/a	n/a	n/a	n/a
	60	n/a	n/a	n/a	n/a	n/a	n/a
20W SOLAR PANEL	5	48	57	29	34	12	14
	15	44	52	25	30	n/a	10
	20	42	50	23	28	n/a	n/a
	50	30	38	13	17	n/a	n/a
	100	13	19	n/a	n/a	n/a	n/a
40W SOLAR PANEL	5	91	129	55	78	23	32
	15	86	124	51	73	19	29
	20	84	121	49	71	17	27
	100	49	83	18	37	n/a	n/a
	200	11	40	n/a	n/a	n/a	n/a
60W SOLAR PANEL	5	113	203	68	123	28	52
	15	108	197	64	118	25	48
	20	106	195	62	115	23	45
	100	69	153	29	78	n/a	15
	250	10	80	n/a	17	n/a	n/a

All numbers are estimates. Actual results may vary.

STEP 8 continued...

SOLAR PANEL(S)

The location of the panel(s) is critical to the success of the installation. In general, the panel(s) should be mounted using the provided angle bracket facing **due south**. Use a compass to determine direction. The solar panel(s) should be mounted in an area clear of all obstructions and shading from buildings and trees. If the panel(s) is not casting a shadow, the battery is not being charged.

TIPS:

- *Tall trees or buildings that do not shade the solar panel(s) in the summer could shade the solar panel(s) during the winter months when the sun sits lower in the sky.*
- *The area around the solar panel(s) should be clear of shadows or obstructions to the sun for a 180° arc east to west.*
- *Wire runs should be kept as short as possible. The solar panel(s) can be located up to 100 feet (30.48 m) from the operator using #16 AWG wire in any direction, including elevating it.*
- *DO NOT install solar panel near potential shading or obstructions that will block the panel during any part of the day.*
- *To optimize the system for winter operation the angle can be increased an additional 15° (solar panel(s) sits more vertical).*

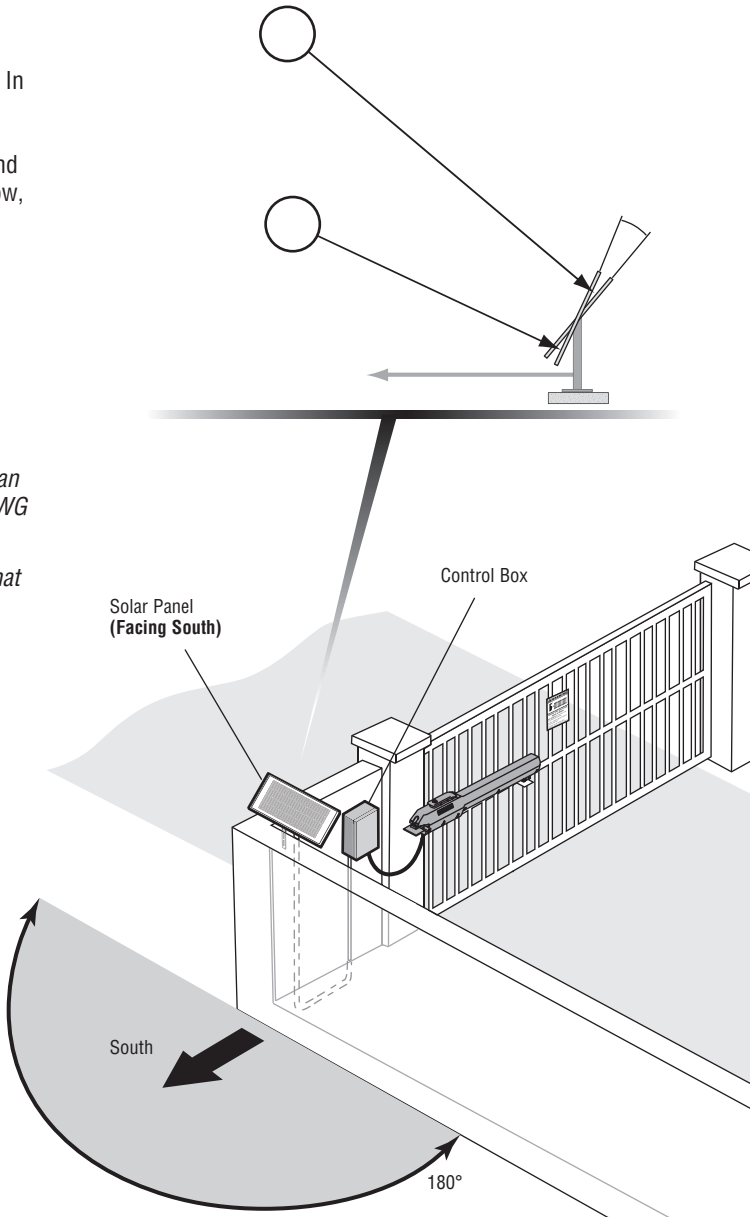

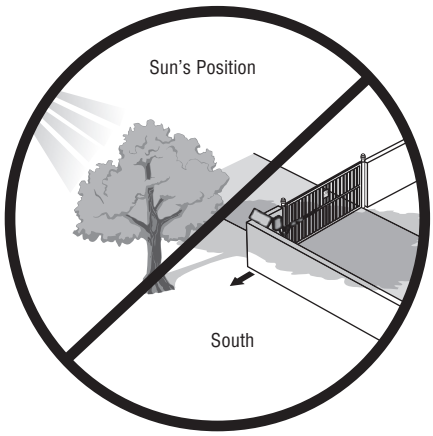

STEP 8 continued...

SOLAR PANEL(S)

INSTALL THE SOLAR PANEL

1. Position solar bracket on mounting surface. Mark and drill holes.
2. Insert two bolts into the track located on the back of the solar panel(s).
3. Slide bolts in track away from bolt hole and align both bolts.
4. Secure solar panel(s) to solar bracket using two washered nuts.
5. Secure solar panel(s) assembly to mounting surface using appropriate hardware.

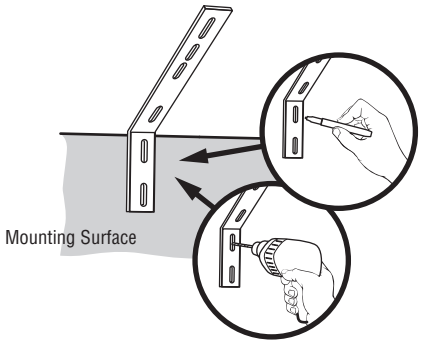

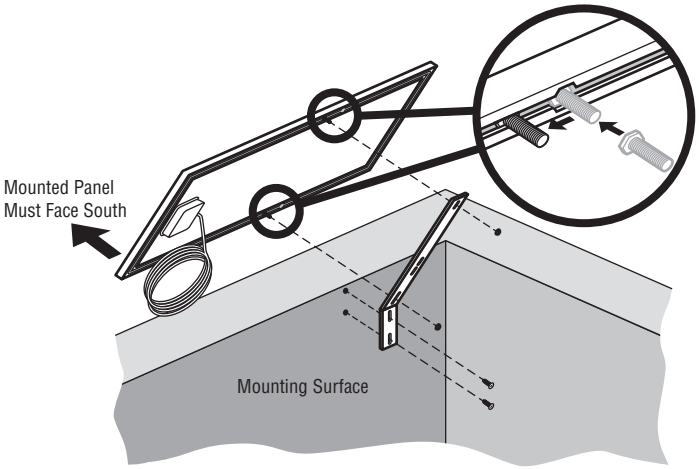

WIRE THE SOLAR PANELS

1. Connect the red wire (+) from one solar panel to the black wire (-) of the other solar panel.
2. Connect the shorter red wire (+) from the J15 plug (new wire harness) labeled DC Power to the red wire on one solar panel.
3. Connect the shorter black wire (-) from the J15 plug (new wire harness) labeled DC Power to the black wire from the other solar panel.

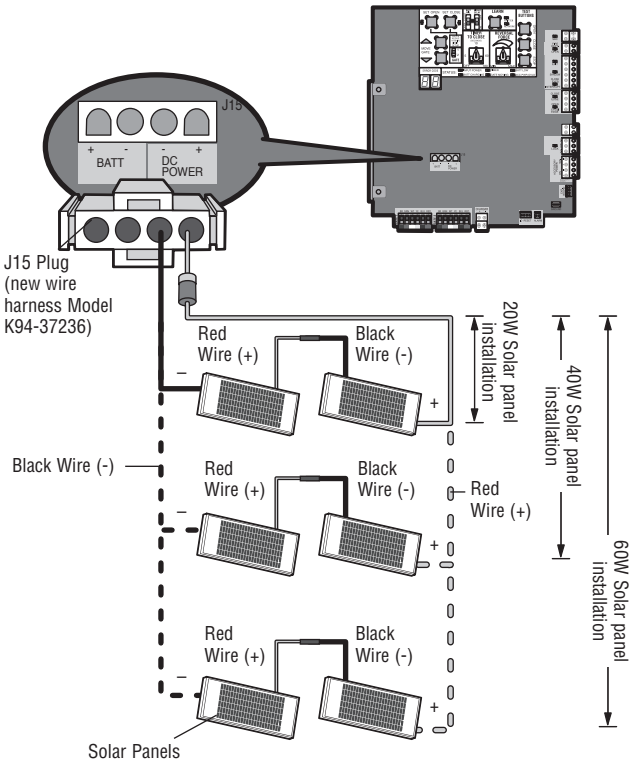

STEP 8 continued...

SOLAR PANEL(S)

CONNECT BATTERIES

1. Place the battery tray in the bottom right corner of the control box. Ensure the wires are not pinched and routed to the side of the battery tray.
2. Place the batteries in the control box as shown.
3. Connect the longer red wire from the J15 plug (new solar wire harness) to the positive (+) terminal of one battery. Connect the longer black wire from the J15 plug (new wire harness) to the negative (-) terminal of the other battery.
4. Apply power by plugging the J15 plug (new solar wire harness) into the J15 input on the control board. ***NOTE:*** *You may see a small spark when plugging the J15 plug into the board.*

Large Metal Control Box for Solar Applications (Model XLSOLARCONTDC)

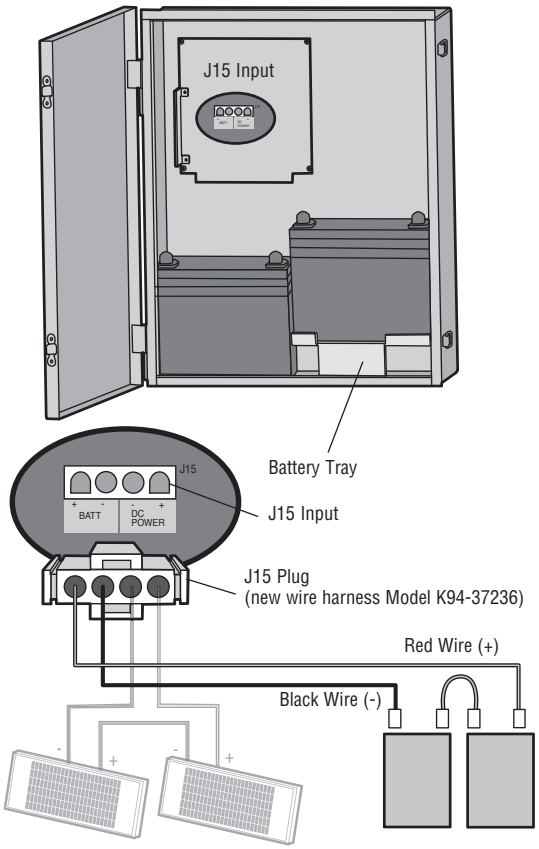

APPENDIX

LIMIT SETUP WITH A REMOTE CONTROL

To set the limits using a remote control, first you will need a 3-button remote control that has been programmed for OPEN, CLOSE, and STOP. Refer to the Programming section.

INITIAL LIMITS AND FORCE ADJUSTMENT

For dual gate applications the limits will have to be set for each operator. The gate MUST be attached to the operator before setting the limits and force.

Ensure the gate is closed.

1. Press and release the SET OPEN and SET CLOSE buttons simultaneously to enter limit setting mode.
2. Press and hold the OPEN or CLOSE button on the remote control until the gate reaches the desired open position. The gate can be jogged back and forth using the OPEN and CLOSE buttons on the remote control.
3. Once the gate is in the desired open position, press and release the STOP button on the remote control.
4. Press and release the OPEN button on the remote control again to set the open limit.
5. Press and hold the CLOSE or OPEN button on the remote control until the gate reaches the desired close position. The gate can be jogged back and forth using the OPEN and CLOSE buttons on the remote control.
6. Once the gate is in the desired close position, press and release the STOP button on the remote control.
7. Press and release the CLOSE button on the remote control again to set the close limit.
8. Cycle the gate open and close. This automatically sets the force.

When limits are set properly the operator will automatically exit limit setting mode.

ADJUST THE LIMITS

If the limits have already been set the operator will exit the limit setting mode after resetting each limit.

Set the Close Limit Only

1. Press and release the SET OPEN and SET CLOSE buttons simultaneously to enter limit setting mode.
2. Press and hold the CLOSE button on the remote control until the gate reaches the desired close position. The gate can be jogged back and forth using the OPEN and CLOSE buttons on the remote control.
3. Once the gate is in the desired close position, press and release the STOP button on the remote control.
4. Press and release the CLOSE button on the remote control again to set the close limit.

When the close limit is set properly the operator will automatically exit limit setting mode.

Set the Open Limit Only

1. Press and release the SET OPEN and SET CLOSE buttons simultaneously to enter limit setting mode.
2. Press and hold the OPEN button on the remote control until the gate reaches the desired open position. The gate can be jogged back and forth using the OPEN and CLOSE buttons on the remote control.
3. Once the gate is in the desired open position, press and release the STOP button on the remote control.
4. Press and release the OPEN button on the remote control again to set the open limit.

When the open limit is set properly the operator will automatically exit limit setting mode.

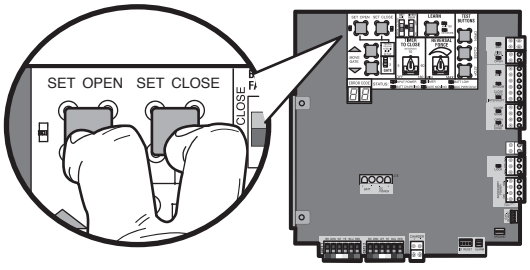

3-Button Remote Control programmed for OPEN, CLOSE, and STOP

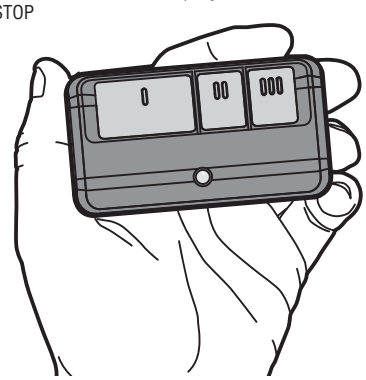

SAMS WIRING WITH RELAYS NOT ENERGIZED

The Sequenced Access Management System (SAMS) are programmable relays used to determine the order in which more than one control device operates across an opening. For example, where a swing gate and a barrier gate are both used, the swing gate may be set to open all the way before the barrier gate activates. An example of SAMS wiring is shown below.

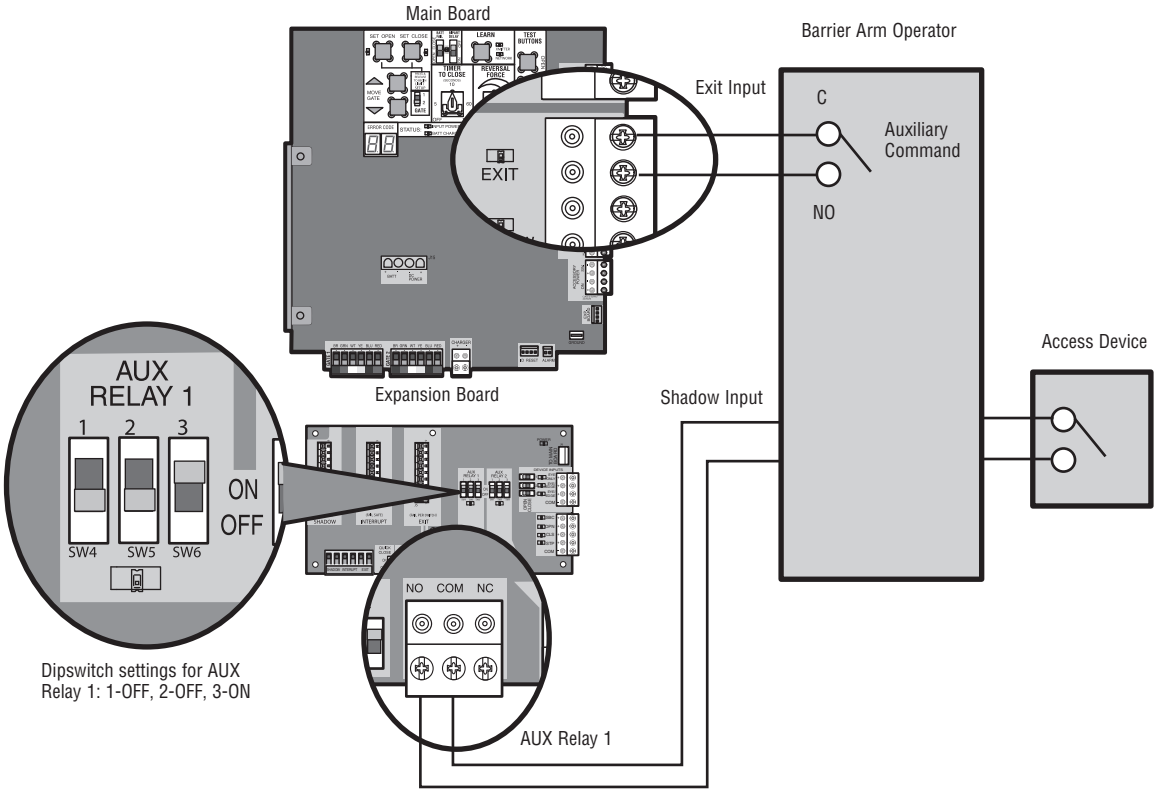

REPAIR PARTS

STANDARD CONTROL BOX

ITEM	PART NUMBER	DESCRIPTION
1	K74-36798-1	Standard Plastic Control Box Only
2	K76-36296-1	Outlet
3	K75-36635	Control Board Bracket
4	K1D8052-1CC	Control Board
5	K1D8080-1CC	Expansion Board
6	K94-36411	Piezo Alarm
7	K94-36408-1	Reset Switch with Product ID
8	K74-36596	Batteries (2) with jumper
9	LA500HDTKITSTD	Toroidal Transformer
10	29-NP712	Single Battery
NOT SHOWN		
	K77-36541	Antenna
	LA500CONTDC	Standard Plastic Control Box (with control board)
	K94-36274-2	J15 Harness

LARGE METAL CONTROL BOX (XLM)

NOT SHOWN		
	K76-34771	Outlet
	K94-37236	Solar 33AH Battery Harness
	K94-36274-1	7AH Battery Harness
	K10-36183	33AH Battery Tray
	APOW3	Transformer

GATE OPERATOR ARM

ITEM	PART NUMBER	DESCRIPTION
11	LA500	Primary Arm
12	KSWG-0623	Rear Connector with Pin
13	41ASWG-0119	Release Keys
14	Q230	Steel Bracket Mounting Plates
15	Q232	Bottom Washer and Nut
16	K94-36591	Junction Box with Cable
NOT SHOWN		
	K77-36389	Hardware Bag

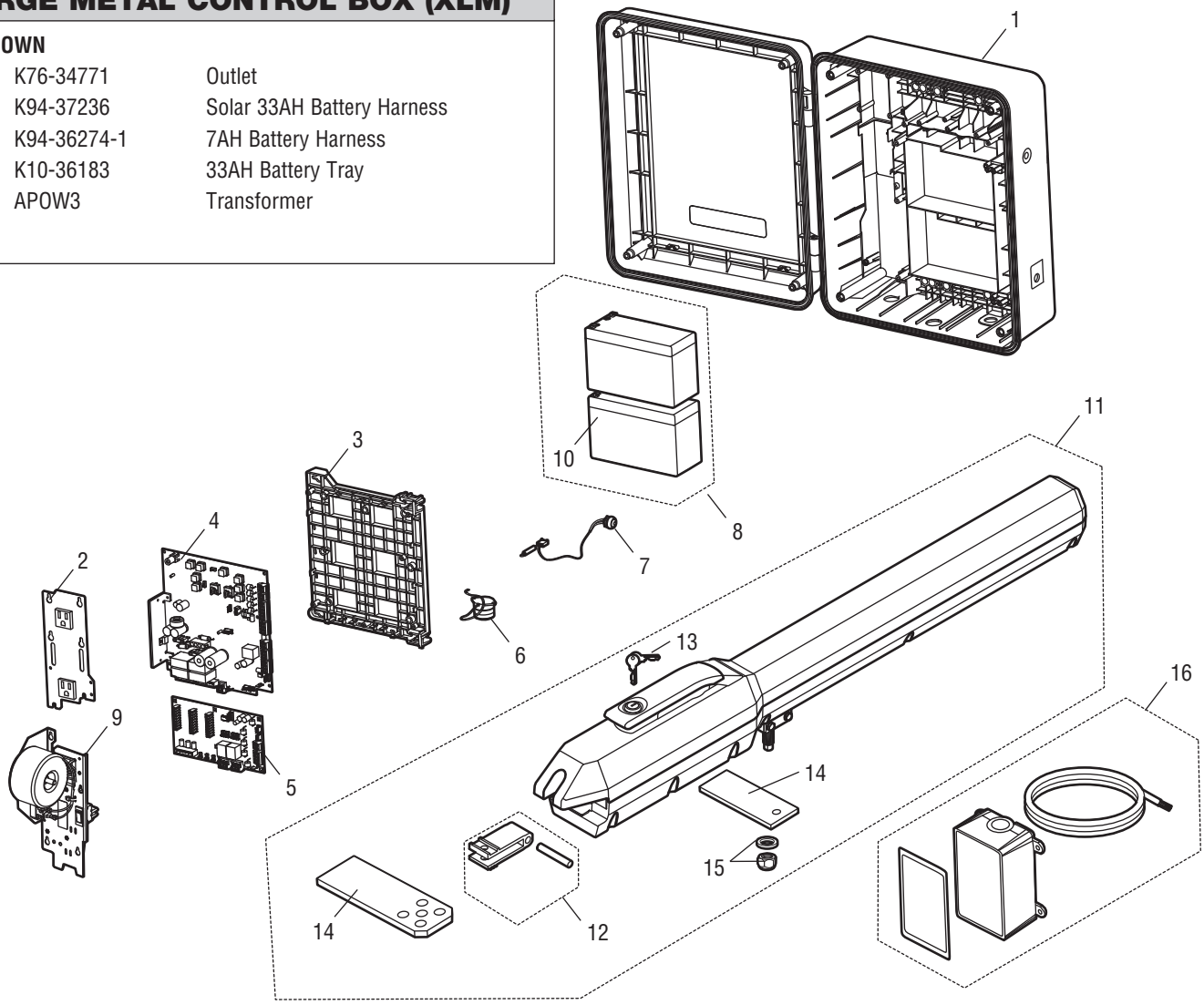

WIRING DIAGRAM

STANDARD CONTROL BOX

⚠ WARNING

To protect against fire and electrocution:

- DISCONNECT power and battery BEFORE installing or servicing operator.

For continued protection against fire:

- Replace ONLY with fuse of same type and rating.

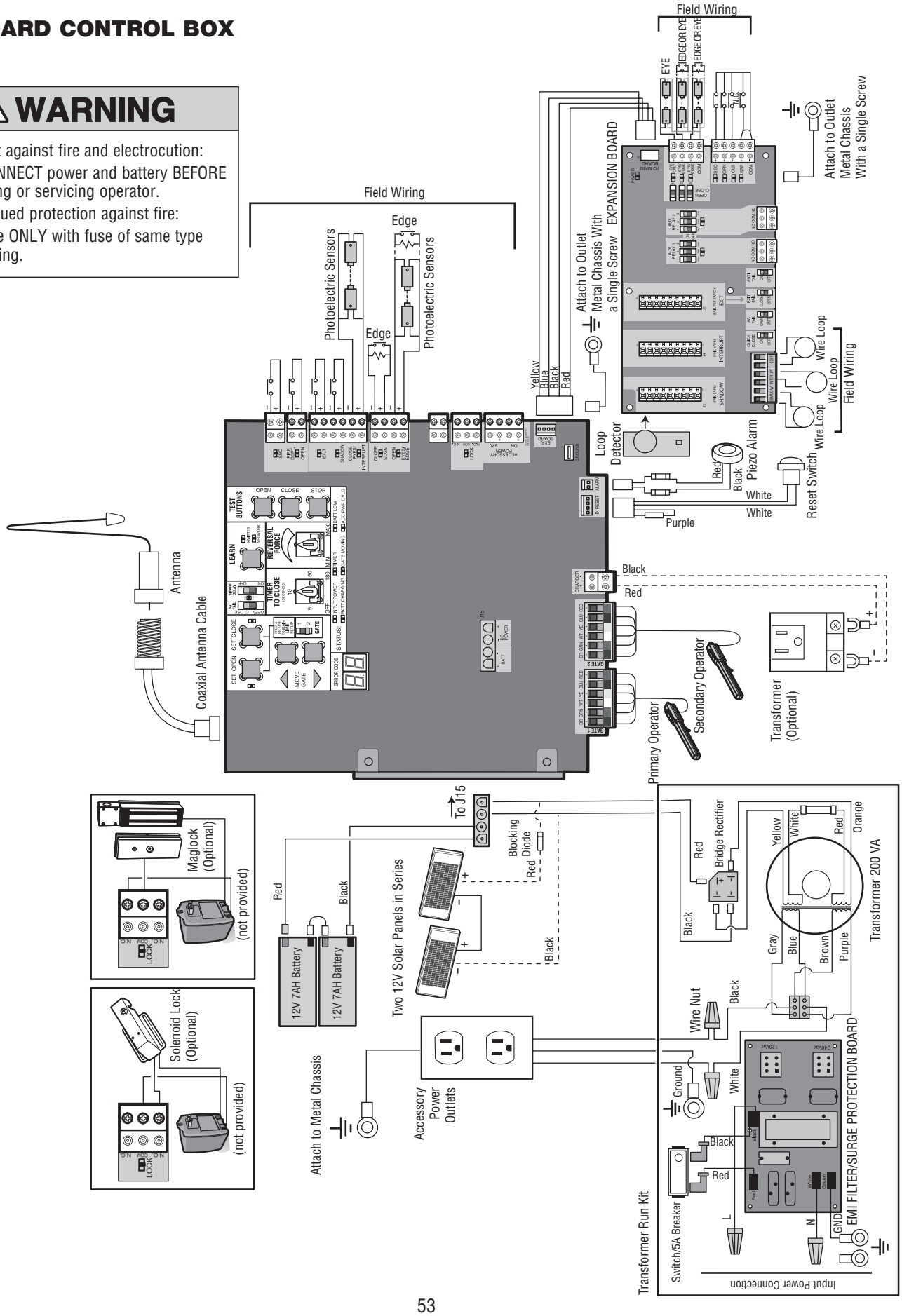

WIRING DIAGRAM

LARGE METAL CONTROL BOX

⚠ WARNING

To protect against fire and electrocution:

- DISCONNECT power and battery BEFORE installing or servicing operator.

For continued protection against fire:

- Replace ONLY with fuse of same type and rating.

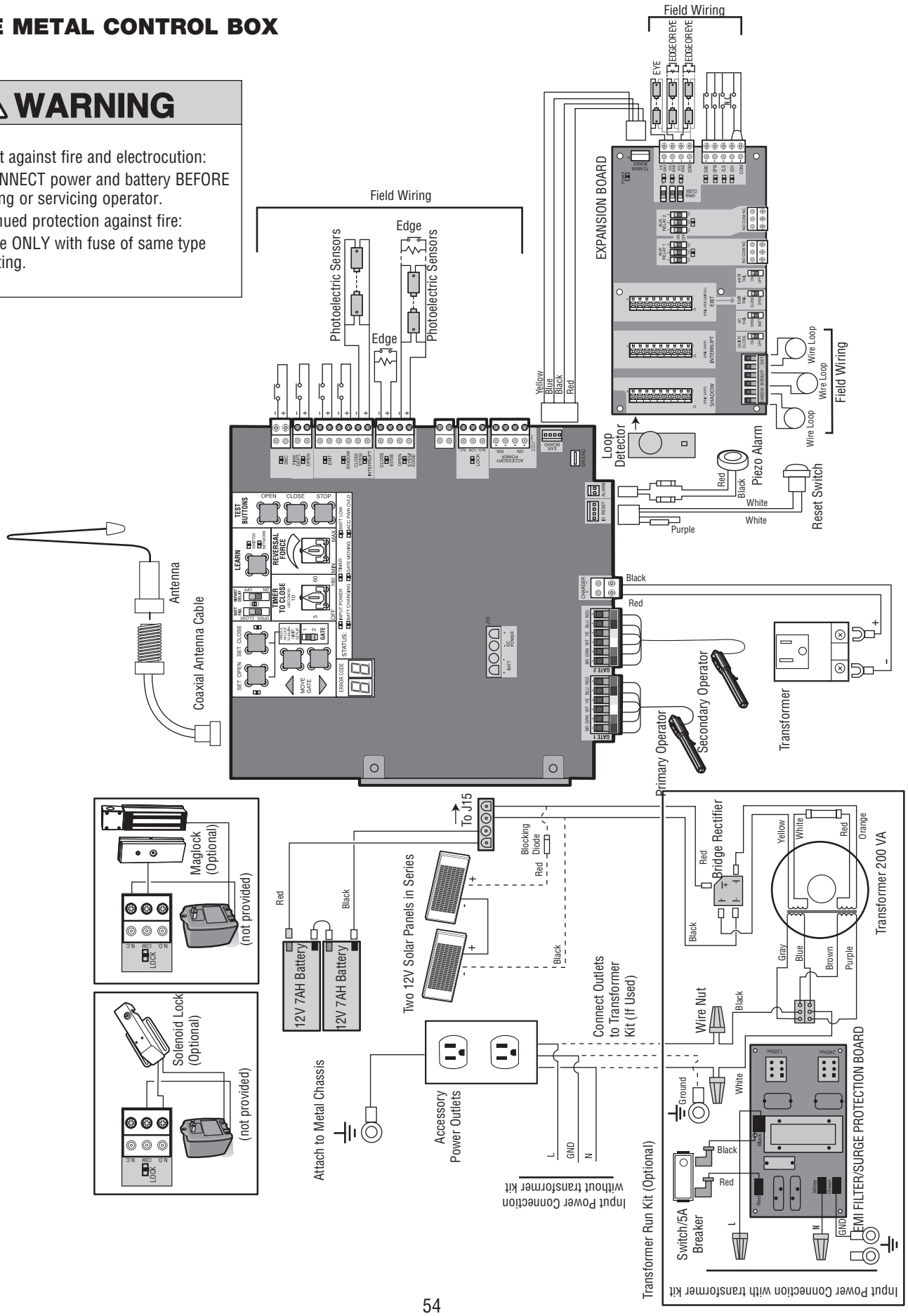

ACCESSORIES

ENTRAPMENT PROTECTION DEVICES

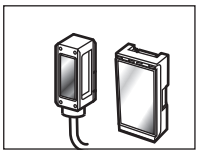

PHOTOELECTRIC SENSORS (MONITORED, NON-CONTACT)

The photoelectric sensors are designed to detect an obstacle in the path of the electronic beam and stop the operator. Includes mounting brackets.

Models CPS-UN4 and CPS-RPEN4GM (LiftMaster low power accessory)

VEHICLE DETECTION DEVICES

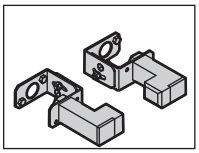

PHOTOELECTRIC SENSORS (NON-MONITORED, NON-CONTACT)

The photoelectric sensors are designed to detect an obstacle in the path of the electronic beam and stop the operator. Includes mounting brackets.

Models AOMRON E3K-R10K4-NR (retro-reflective) and RETROAB 60-2728 (retro-reflective)

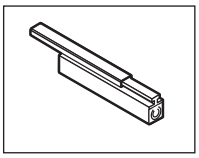

SENSING EDGE (2-WIRE, NON-MONITORED, CONTACT)

Sensing edges can detect an obstacle upon contact and stop the operator.

Models G65MG0204, G65MG0205, G65MGR205, and G65MGS205

SENSING EDGE CHANNEL

Mounting channel for all MG020 type edges.

Model G65ME120C5

REMOTE CONTROLS

Chamberlain offers a variety of LiftMaster remote controls to satisfy your application needs. Single-button to 4-button, visor or key chain. The following remote controls are compatible with operators manufactured by Chamberlain after 1993. Contact your authorized LiftMaster dealer for additional details and options.

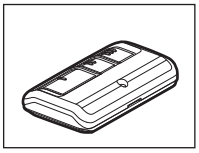

3-BUTTON REMOTE CONTROL

The 3-button remote control can be programmed to control the operator. Includes visor clip.

Model 893MAX

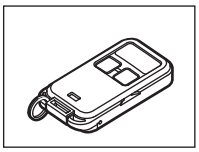

3-BUTTON MINI-REMOTE CONTROL

The 3-button remote control can be programmed to control the operator. Includes key ring and fastening strip.

Model 890MAX

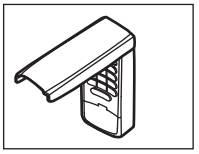

KEYLESS ENTRY

Enables homeowner to operate gate operator from outside by entering a 4-digit code on a specially designed keypad.

Model 877MAX

MISCELLANEOUS

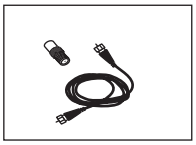

REMOTE ANTENNA EXTENSION KIT

The remote antenna extension kit allows the antenna to be remotely installed.

Model 86LM

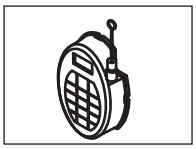

WIRELESS ACCESS CONTROL RECEIVER

Access control receiver for up to 450 remote controls.

Model STAR450-315

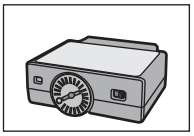

PLUG-IN LOOP DETECTOR

Low power. Conveniently plugs into existing control board.

Model LOOPDETLM

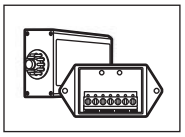

LOOP DETECTOR

Low power loop detectors mounted and wired separately inside control box. LiftMaster low power accessory.

Model LD7LP

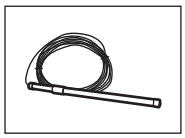

VEHICLE SENSING PROBE

The vehicle sensing probe is buried in the ground and can detect a car as it approaches and will then open the gate.

Model CP3

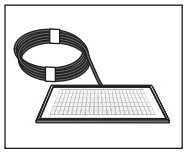

SOLAR PANEL KIT - 10 WATT

This kit is to replace or add a solar panel to the operator application. Up to four solar panels can be connected to the operator. Requires a 33AH battery harness (see below).

Model SOLPNL10W12V (requires 2 minimum)

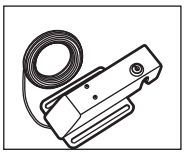

SOLENOID GATE LOCK

The automatic gate lock is a solenoid-driven lock that automatically unlocks when the gate is open and locks when the gate is closed. Can be mounted onto a gate or post. Can be released in case of emergency.

Model GC824-12 (12/24 Vac/dc)

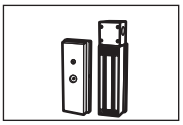

MAGNETIC GATE LOCK

Outdoor magnetic lock, transformer, junction box, mounting plate and hardware. Not for use with Solar Applications. Must be powered separately.

Model MG1300 (12/24 Vdc)

TRANSFORMER

Model APOW3

ACCESSORIES

BATTERIES

Gate access system batteries replace or upgrade the gate operator batteries. Two identical 12 Vdc batteries are required for each gate operator. Do not mix 7AH and 33AH batteries within a gate operator.

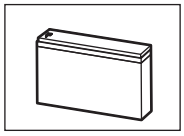

7AH BATTERIES

Standard 7 AMP-Hour Battery, 12 Vdc, to replace original batteries provided with operator. Reuse existing harnesses.

Model 29-NP712

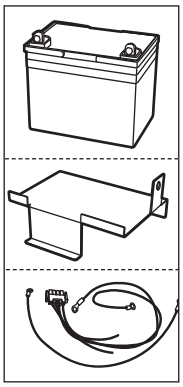

33AH BATTERIES

Upgrade 33 AMP-Hour Battery, 12 Vdc. Ideal for solar applications and extended battery backup. For use with Large Metal Control Box ONLY.

Model A12330SGLPK

BATTERY TRAY

Required for 33AH applications.

Model K10-36183)

SOLAR BATTERY HARNESS

Required for 33AH applications.

Model K94-37236

HOW TO ORDER REPAIR PARTS

DEVANCO CANADA

19192 HAY ROAD, UNIT Q
SUMMERSTOWN, ON K0C 2E0

TOLL FREE: 855-931-3334
www.devancocanada.com

WHEN ORDERING REPAIR PARTS
PLEASE SUPPLY THE FOLLOWING INFORMATION:

✓ PART NUMBER
✓ DESCRITPION
✓ MODEL NUMBER

© 2014, The Chamberlain Group, Inc. – All Rights Reserved

WARRANTY

LIFTMASTER 2 YEAR LIMITED WARRANTY

The Chamberlain Group, Inc. ("Seller") warrants to the first purchaser of this product, for the structure in which this product is originally installed, that it is free from defect in materials and/or workmanship for a period of 2 years from the date of purchase [and that the LA500DC is free from defect in materials and/or workmanship for a period of 2 years from the date of purchase]. The proper operation of this product is dependent on your compliance with the instructions regarding installation, operation, maintenance and testing. Failure to comply strictly with those instructions will void this limited warranty in its entirety.

If, during the limited warranty period, this product appears to contain a defect covered by this limited warranty, call **1-800-528-2806**, toll free, before dismantling this product. Then send this product, pre-paid and insured, to our service center for warranty repair. You will be advised of shipping instructions when you call. Please include a brief description of the problem and a dated proof-of-purchase receipt with any product returned for warranty repair. Products returned to Seller for warranty repair, which upon receipt by Seller are confirmed to be defective and covered by this limited warranty, will be repaired or replaced (at Seller's sole option) at no cost to you and returned pre-paid. Defective parts will be repaired or replaced with new or factory-rebuilt parts at Seller's sole option.

ALL IMPLIED WARRANTIES FOR THE PRODUCT, INCLUDING BUT NOT LIMITED TO ANY IMPLIED WARRANTIES OF MERCHANTABILITY AND FITNESS FOR A PARTICULAR PURPOSE, ARE LIMITED IN DURATION TO THE 2 YEAR LIMITED WARRANTY PERIOD SET FORTH ABOVE [EXCEPT THE IMPLIED WARRANTIES WITH RESPECT TO THE LA500DC, WHICH IS LIMITED IN DURATION TO THE 2 YEAR LIMITED WARRANTY PERIOD FOR THE LA500DC], AND NO IMPLIED WARRANTIES WILL EXIST OR APPLY AFTER SUCH PERIOD. Some states do not allow limitations on how long an implied warranty lasts, so the above limitation may not apply to you. THIS LIMITED WARRANTY DOES NOT COVER NON-DEFECT DAMAGE, DAMAGE CAUSED BY IMPROPER INSTALLATION, OPERATION OR CARE (INCLUDING, BUT NOT LIMITED TO ABUSE, MISUSE, FAILURE TO PROVIDE REASONABLE AND NECESSARY MAINTENANCE, UNAUTHORIZED REPAIRS OR ANY ALTERATIONS TO THIS PRODUCT), LABOR CHARGES FOR REINSTALLING A REPAIRED OR REPLACED UNIT, OR REPLACEMENT OF BATTERIES.

THIS LIMITED WARRANTY DOES NOT COVER ANY PROBLEMS WITH, OR RELATING TO, THE GATE OR GATE HARDWARE, INCLUDING BUT NOT LIMITED TO THE GATE SPRINGS, GATE ROLLERS, GATE ALIGNMENT OR HINGES. THIS LIMITED WARRANTY ALSO DOES NOT COVER ANY PROBLEMS CAUSED BY INTERFERENCE. ANY SERVICE CALL THAT DETERMINES THE PROBLEM HAS BEEN CAUSED BY ANY OF THESE ITEMS COULD RESULT IN A FEE TO YOU.

UNDER NO CIRCUMSTANCES SHALL SELLER BE LIABLE FOR CONSEQUENTIAL, INCIDENTAL OR SPECIAL DAMAGES ARISING IN CONNECTION WITH USE, OR INABILITY TO USE, THIS PRODUCT. IN NO EVENT SHALL SELLER'S LIABILITY FOR BREACH OF WARRANTY, BREACH OF CONTRACT, NEGLIGENCE OR STRICT LIABILITY EXCEED THE COST OF THE PRODUCT COVERED HEREBY. NO PERSON IS AUTHORIZED TO ASSUME FOR US ANY OTHER LIABILITY IN CONNECTION WITH THE SALE OF THIS PRODUCT.

Some states do not allow the exclusion or limitation of consequential, incidental or special damages, so the above limitation or exclusion may not apply to you. This limited warranty gives you specific legal rights, and you may also have other rights which vary from state to state.